MOLZEN–CORBIN & ASSOCIATES 2000 – COPYRIGHT ©

CITY OF CARLSBAD
101 N. HALAGUENO STREET
CARLSBAD, NEW MEXICO

△2 MARCH 2016

construction plans for the

CALLAWAY DRIVE

REBID

△1 CN C2150929

STA. 10+00 TO STA. 53+85

0.83 MILES

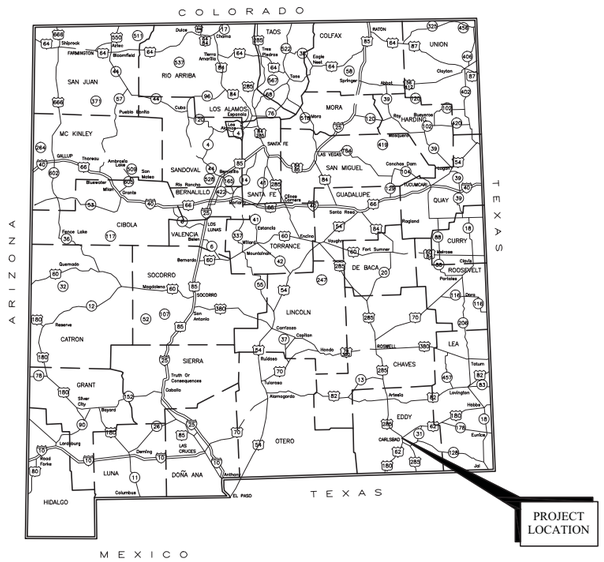

VICINITY MAP

INDEX OF DRAWINGS

SHEET	DESCRIPTION
G–001	TITLE SHEET AND INDEX OF DRAWINGS
G–002	GENERAL NOTES AND LOCATION MAP
G–003	QUANTITIES
C–100	ALIGNMENT CONTROL AND SURVEY CONTROL
C–101 TO C–110	CALLAWAY DRIVE PLAN AND PROFILE
C–111 TO C–113	CALLAWAY DRIVE CURBING LAYOUT
C–114 TO C–116	CALLAWAY DRIVE PERMANENT SIGNING AND STRIPING
C–117 TO C–120	CALLAWAY DRIVE SIGNING AND STRIPING QUANTITIES
C–121 TO C–129	DRIVEWAY PLANS
C–130 TO C–132	ADA RAMP DETAILS
C–133 TO C–136	CALLAWAY DRIVE TRAFFIC CONTROL PLAN PHASE 1
C–137 TO C–139	CALLAWAY DRIVE TRAFFIC CONTROL PLAN PHASE 2
C–140 TO C–141	CALLAWAY DRIVE TRAFFIC CONTROL PLAN PHASE 3
C–142 TO C–145	REMOVALS AND RELOCATES
△1 C–200 TO C–210	CALLAWAY DRIVE STORM DRAIN PLAN AND PROFILE
C–401	TYPICAL SECTIONS
C–501	STANDARD DETAILS
C–502	STANDARD DETAILS
C–503	SUPERELEVATION TABLE
C–504	TRAFFIC CONTROL PLAN GENERAL NOTES
C–505	TRAFFIC CONTROL PLAN DETAILS
△1 C–600 TO C–603	CALLAWAY DRIVE STORM DRAIN DETAILS
608–1 TO 608–12	NMDOT CURB RAMP DETAILS
E–101	CALLAWAY DRIVE LIGHTING PLAN NOTES
E–102	CALLAWAY DRIVE LIGHTING PLAN
E–103	CALLAWAY DRIVE LIGHTING PLAN
E–104	CALLAWAY DRIVE LIGHTING PLAN
S–100	BRIDGE GENERAL NOTES
S–101	STRUCTURAL LOCATION PLAN
S–102	STRUCTURE PROFILE AND SECTION
S–103	MODIFIED CONCRETE WALL BARRIER

CIVIL ENGINEERS
Molzen Corbin

SURVEY
Bohannan-Huston

DRAINAGE DESIGN
Bohannan-Huston

CERTIFICATION:

I, WYATT D. KARTCHNER, REGISTERED PROFESSIONAL ENGINEER NO. 20843 HEREBY CERTIFY THAT THE FOLLOWING PLANS AND DESIGNS WERE MADE UNDER MY SUPERVISION AND DIRECTION AND THAT SAME IS TRUE AND CORRECT TO THE BEST OF MY KNOWLEDGE AND BELIEF

WYATT D. KARTCHNER
NEW MEXICO
20843
REGISTERED PROFESSIONAL ENGINEER
2/23/16

N.M.P.E. NO. 20843

THESE DRAWINGS DO NOT INCLUDE NECESSARY COMPONENTS FOR THE CONSTRUCTION SAFETY WHICH SHALL REMAIN THE RESPONSIBILITY OF THE CONTRACTOR.

ALL IDEAS, DESIGNS, ARRANGEMENTS, AND PLANS INDICATED OR REPRESENTED BY THIS INSTRUMENT ARE OWNED BY AND THE PROPERTY OF MOLZEN–CORBIN & ASSOCIATES, AND WERE CREATED AND DEVELOPED FOR USE ON AND IN CONNECTION WITH THE SPECIFIED PROJECT. THESE IDEAS, DESIGNS, ARRANGEMENTS OR PLANS SHALL NOT BE USED BY ANY PERSON, FIRM, OR CORPORATION FOR ANY PURPOSE WHATSOEVER WITHOUT THE WRITTEN CONSENT OF MOLZEN–CORBIN & ASSOCIATES.

THESE DRAWINGS REFLECT INFORMATION ON UTILITIES GATHERED BY SITE INSPECTION, DISCUSSIONS WITH MUNICIPAL OFFICIALS, AND PREVIOUS CONSTRUCTION DOCUMENTS. IT IS POSSIBLE THAT THE EXACT LOCATION OF LINES AND UTILITY CONNECTION POINTS IN THE VICINITY OF REQUIRED WORK MAY BE DIFFERENT FROM THE LOCATION SHOWN ON THESE DRAWINGS. PRIOR TO CONSTRUCTION THE CONTRACTOR SHALL EXCAVATE AND VERIFY THE HORIZONTAL AND VERTICAL LOCATIONS OF ALL OBSTRUCTIONS. SHALL A CONFLICT EXIST THE CONTRACTOR SHALL NOTIFY THE ENGINEER SO THE CONFLICT CAN BE RESOLVED WITH A MINIMUM AMOUNT OF DELAY.

DESCRIPTION	REV DATE	REV NO
ADD STORM DRAIN PLANS	10/27/15	△1
REVISE ROAD & DRAINAGE	2/22/16	△2

NUMERIC SCALE CONFIRMATION

DRAWINGS ARE DEPICTED AT INTENDED NUMERIC SCALES
IF THIS BAR EQUALS ONE INCH

MOLZENCORBIN
ENGINEERS | ARCHITECTS | PLANNERS
1155 Commerce Dr., Suite F Las Cruces, New Mexico 88011 575 522 0049 office 575 522 7884 fax

10/27/15 GCA133–001

G-001
Sheet

GENERAL NOTES

1. THE TECHNICAL SPECIFICATIONS FOR THIS PROJECT SHALL BE THE NMDOT'S STANDARD SPECIFICATIONS FOR HIGHWAY & BRIDGE CONSTRUCTION, 2014 EDITION.
2. BEFORE PROCEEDING WITH CURB & GUTTER AND SIDEWALK OPERATION, THE CONTRACTOR SHALL COORDINATE WITH THE TELEPHONE COMPANY & ELECTRIC COMPANY REGARDING RAISING OR RELOCATING THE TELEPHONE COMPANY & ELECTRIC COMPANY MANHOLES AS NECESSARY THAT MAY BE LOCATED WITHIN THE CURB & GUTTER AND SIDEWALK LIMITS.
3. ACCESS TO LOCAL BUSINESS AND RESIDENCES SHALL BE KEPT OPEN INSOFAR AS POSSIBLE. ANY ACCESS CLOSURE MUST BE SCHEDULED AT LEAST 24 HOURS IN ADVANCE WITH PROPERTY OWNER AND APPROVED BY THE ENGINEER.
4. THE CONTRACTOR SHALL NOT DISTURB ANY STRUCTURES OR FACILITIES OUTSIDE OF CONSTRUCTION LIMIT. THE REPLACEMENT OF ANY DAMAGED STRUCTURE OR FACILITIES SHALL BE AT THE CONTRACTOR'S EXPENSE WITH NO DELAY.
5. CONTRACTOR SHALL ESTABLISH CONSTRUCTION TRAFFIC CONTROL PLAN AS OUTLINED IN THE LATEST EDITION OF THE MUTCD AND SHALL PERFORM TRAFFIC CONTROL MAINTENANCE FOR THE DURATION OF THE CONSTRUCTION. CONTRACTOR SHALL SUBMIT A COPY OF THE CONSTRUCTION TRAFFIC CONTROL PLAN TO THE PROJECT ENGINEER FOR APPROVAL WITHIN 10 WORKING DAYS AFTER AWARD OF THE CONTRACT. DEVIATION FROM MUTCD GUIDELINES SHALL BE SUBMITTED TO THE PROJECT ENGINEER FOR APPROVAL PRIOR TO IMPLEMENTATION IN THE FIELD.
6. THE CONTRACTOR SHALL SUBMIT 5 COPIES OF THE CONSTRUCTION SCHEDULE, DEMONSTRATING EACH ACTIVITY WITH THE PROPOSED START AND COMPLETION DATE, AND ALL ACTIVITIES COMBINED AS A NETWORK, 10 DAYS AFTER THE AWARD OF CONTRACT. THIS SCHEDULE SHALL BE IN A DETAILED BAR CHART FORMAT. THE CONTRACTOR SHALL SUBMIT AN UPDATED SCHEDULE WITH EACH PAY ESTIMATE.
7. THE CONTRACTOR SHALL NOT DISTURB, COVER, OR REMOVE ANY SURVEY MONUMENTS, INCLUDING TRIANGULATION STATIONS, BENCHMARKS, MONUMENTS, SECTION CORNERS, N.M.S.H.D. MONUMENTS, LAND GRANT MARKERS, OR ANY OTHER PERMANENT REFERENCE MARKERS LOCATED WITHIN THE CONSTRUCTION LIMITS OR ON THE RIGHT-OF-WAY LINE OF THIS PROJECT UNLESS WRITTEN DOCUMENTATION REGARDING REFERENCING OF SAID MARKER HAS BEEN PROVIDED BY THE CONTRACTOR TO THE ENGINEER FOR HIS APPROVAL. THE CONTRACTOR SHALL RESET DESTROYED MONUMENTS IN ACCORDANCE WITH STATUTE 61-23-1 NASA AT HIS OWN EXPENSE. THE CONTRACTOR SHALL BE ASSESSED A ONE THOUSAND DOLLAR ($1,000.00) PENALTY FOR EACH MONUMENT WHICH HAS NOT BEEN PROPERLY REFERENCED PRIOR TO ITS DISTURBANCE OR DESTRUCTION.
8. THE CONTRACTOR SHALL NOT STORE MATERIAL OR EQUIPMENT WITHIN 15 FEET OF EDGE OF DRIVING LANE DURING NON-WORKING HOURS.
9. THE CONTRACTOR SHALL BE REQUIRED TO CONFINE HIS WORK WITHIN THE CONSTRUCTION LIMITS OR RIGHT-OF-WAY. PARKING OF PRIVATE VEHICLES SHALL NOT BE ALLOWED ALONG CONSTRUCTION AREAS THROUGHOUT CONSTRUCTION LIMITS. IT SHALL BE THE CONTRACTOR'S RESPONSIBILITY TO PROHIBIT ASPHALT VEHICLES AND EQUIPMENT, ROLLERS, CRANES, ETC., FROM DRIVING UPON, ACROSS, OR TURNING ON PRIVATE PROPERTY ADJACENT TO PROJECT WORK AREAS.
10. ALL EXISTING SIGNS, DELINEATORS, ETC., WHICH INTERFERE WITH CONSTRUCTION OPERATIONS WILL BE REMOVED AND REINSTALLED BY THE CONTRACTOR, AND THIS WORK WILL BE INCIDENTAL TO THE COMPLETION OF WORK. ALSO, IF ANY HIGHWAY SIGNS, DELINEATORS, ETC., ARE DAMAGED AS A RESULT OF REMOVALS, THE CONTRACTOR WILL REPLACE AND REINSTALL AT NO ADDITIONAL COST TO THE CITY.
11. THE CONTRACTOR SHALL SCHEDULE THE RELOCATION OF GUY WIRE OR POWER POLE (AS NECESSARY) WITH XCEL ENERGY/SPS AT LEAST ONE WEEK PRIOR TO COMMENCING WORK IN ANY PART OF PROJECT AREA.
12. ALL WORK ON THIS PROJECT SHALL BE PERFORMED IN ACCORDANCE WITH APPLICABLE FEDERAL, STATE, AND LOCAL LAWS, ORDINANCES, RULES, AND REGULATIONS CONCERNING CONSTRUCTION SAFETY AND HEALTH.
13. IMMEDIATELY FOLLOWING RECEIPT OF NOTICE TO PROCEED THE CONTRACTOR SHALL GIVE WRITTEN NOTICE TO PROPERTY OWNERS WHO HAVE STRUCTURES OR LANDSCAPING WITHIN ROADWAY RIGHT-OF-WAY & IN THE WAY OF THE NEW CONSTRUCTION THAT SUCH FEATURES MUST BE REMOVED BY THE PROPERTY OWNER.
14. REMOVAL OF EXISTING CUT-OFF WALLS, CURB & GUTTER TRANSITIONS, SIDEWALK AND EXISTING PAVEMENT SHALL BE CONSIDERED INCIDENTAL TO THE COMPLETION OF THE PROJECT & NO MEASUREMENT OF PAYMENT WILL BE MADE THEREFORE.
15. THE CONTRACTOR SHALL VERIFY THE RELATIVE ELEVATION OF BENCHMARKS, AS SHOWN ON PLANS, AND SHALL ESTABLISH AND REFERENCE THE CENTERLINE OF SURVEY IN SUCH A WAY THAT IT COULD BE REESTABLISHED AND REFERENCED TO AT ANY TIME DURING THE CONSTRUCTION OF THIS PROJECT. THIS SHALL BE CONSIDERED INCIDENTAL TO THE COMPLETION OF THE PROJECT & NO MEASUREMENT OF PAYMENT WILL BE MADE THEREFORE.
16. ALL CURVE DATA ARE TO EDGE OF PAVEMENT UNLESS OTHERWISE NOTED ON PLANS.
17. CONTRACTOR SHALL REPAIR TO NEW CONDITION ANY DAMAGE TO STREETS, BUILDINGS, LANDSCAPING, AND OTHER FEATURES AS THE CITY DEEMS NECESSARY AND NO PAYMENT WILL BE MADE THEREFOR.
18. THE CONTRACTOR SHALL SCHEDULE THE RELOCATION OF COMMUNICATION ENCLOSURES (PHONE PEDESTALS) AND JUNCTION/PULLBOXES WITH THE LOCAL SERVICE PROVIDERS REQUIRED. THIS COORDINATION SHALL OCCUR AT LEAST ONE WEEK PRIOR TO COMMENCING WORK IN ANY PART OF THE PROJECT AREA. THIS SHALL BE CONSIDERED INCIDENTAL TO THE COMPLETION OF THE PROJECT & NO MEASUREMENT OF PAYMENT WILL BE MADE THEREFORE.
19. CONTRACTOR SHALL VARY GUTTER PAN SLOPE FROM STANDARD TO DEPRESSED AS REQUIRED FOR PROPER DRAINAGE THROUGH SUPER ELEVATED SECTIONS AND TRANSITIONS. THIS SHALL BE CONSIDERED INCIDENTAL TO THE COMPLETION OF THE PROJECT & NO MEASUREMENT OF PAYMENT WILL BE MADE THEREFORE.
20. NEW SIGNS SHALL BE: MOUNTED 7' FROM FINISHED GRADE TO BOTTOM OF SIGNS, ALUMINUM PANEL SIGN MATERIAL (SEE NMDOT STANDARD SPECS.), RETROREFLECTIVE SHEETING – NMDOT TYPE IX, HIGH INTENSITY.
21. CONTRACTOR SHALL VIDEO TAPE PROJECT SITE PRIOR TO CONSTRUCTION.
22. CONTRACTOR SHALL REPLACE ANY DAMAGED FENCES, BLOCKWALLS, OR ANY SURFACE FEATURES TO EXISTING OR BETTER CONDITION, IF DAMAGE IS CAUSED BY CONSTRUCTION OR CONSTRUCTION ACTIVITY. THIS SHALL SHALL BE CONSIDERED INCIDENTAL TO THE COMPLETION OF THE PROJECT & NO MEASUREMENT OF PAYMENT WILL BE MADE THEREFORE.
23. IRRIGATION TO LANDSCAPE AREAS SHALL BE RE-ROUTED/ CAPPED AS NEEDED. COORDINATE THIS WITH THE CITY OF CARLSBAD.
24. BID ITEM 667130 MAILBOX INSTALLATION MULTIPLE, EACH MAILBOX SHALL HAVE A MINIMUM OF 10 LOCKING DOORS, 1 PARCEL LOCKER, AND 1 OUTGOING MAIL SLOT.
25. LIGHTING FOUNDATION QUANTITIES ARE INCLUDED IN BID ITEM 502030 DRILLED SHAFT FOUNDATION 30" DIAMETER AND BID ITEM 540060 REINFORCING BARS GRADE 60.
26. REMOVAL OF FIRE HYDRANTS SHALL INCLUDE REMOVAL OF HYDRANT, 6" WATERLINE, AND TEE AND INSTALLATION OF SPOOL PIECE ALONG 12" AC WATERLINE. THIS WORK SHALL BE PAID IN BID ITEM 601000 REMOVAL OF STRUCTURES AND OBSTRUCTIONS.

PROJECT VICINITY MAP

Utility Company	Contact	Phone Number	Email
New Mexico Gas Company	Joe Dunlop	575-415-5605	joe.dunlop@nmgco.com
Xcel Energy	Robert Chavez		robert.chavez@xcelenergy.com
Windstream	Joe Mata	575-361-8134	joe.mata@windstream.com
City of Carlsbad	Mike Hernandez	575-885-6262	mahernandez@cityofcarlsbadnm.com
Carlsbad Irrigation District	Dale Ballard	575-236-6390	dale.ballard@cidistrict.com

LEGEND

	TELEPHONE PEDESTAL		GAS POST
	FIBER OPTIC	GV	GAS VALVE
	ELECTRIC BOX	GM	GAS METER
	LIGHT	WM	WATER METER
	SIGNAL LIGHT		FIRE HYDRANT
	POWER POLE		WATER VALVE
	SANITARY SEWER MANHOLE		SIGN

N

SCALE: 1"=800'

MOLZENCORBIN
1155 Commerce Dr., Suite F
Las Cruces, New Mexico 88011
575 522 0049 office
575 522 7884 fax
MolzenCorbin.com

WYATT D. KARTCHNER
NEW MEXICO
20843
2/23/16
REGISTERED PROFESSIONAL ENGINEER

REV NO	REV DATE	DESCRIPTION
1	2/23/16	ROAD AND DRAIN REVISIONS

PROJECT NUMBER: CRS133-12
DESIGNED BY: WDK
DRAWN BY: EG
CHECKED BY: JTM
PROJ ENGINEER: WDK
PROJECT DATE: OCTOBER 2015

GENERAL NOTES AND LOCATION MAP

CALLAWAY DRIVE
CITY OF CARLSBAD
CARLSBAD, NEW MEXICO

G-002

SHEET

© COPYRIGHT

I:\CARLSBAD\CRS133-12-Callaway Design\DWG\GCA133-002.dwg

SUMMARY OF QUANTITIES

ITEM NUMBER	DESCRIPTION	UNIT	BID LOT 1 ESTIMATED QUANTITY BOP TO 41+00	BID LOT 3 ESTIMATED QUANTITY 41+00 TO 43+00	BID LOT 2 ESTIMATED QUANTITY 43+00 TO EOP	TOTAL PROJECT ESTIMATED QUANTITY
201000	CLEARING & GRUBBING	L.S.	0.70	0.04	0.26	1
203000	UNCLASSIFIED EXCAVATION	CU. YD.	880	9	420	1,309
203100	BORROW	CU. YD.	1,500	765	942	3,207
207000	SUBGRADE PREPARATION	SQ. YD.	13,942	889	5,294	20,125
210000	EXCAVATION & BACKFILL FOR MAJOR STRUCTURES	CU. YD.		11		11
303160	BASE COURSE 6"	SQ. YD.	13,942	889	5,294	20,125
407000	ASPHALT MATERIAL FOR TACK COAT	TON	4.6	0.3	1.8	6.7
408100	PRIME COAT MATERIAL	TON	28.0	1.6	10.4	40
423270	HMA SPIV COMPLETE	SQ. YD.	13,942	889	5,294	20,125
502030	DRILLED SHAFT FOUNDATION 30" DIAMETER	LIN. FT.	49	7	35	91
511000	STRUCTURAL CONCRETE CLASS A	CU. YD.	10		10	20
511200	STRUCTURAL CONCRETE CLASS A-4	SQ. YD.	810			810
511300	SUBSTRUCTURE CONCRETE CLASS A	CU. YD.		11		11
512003	HIGH PERFORMANCE DECK CONCRETE (HPD)	CU. YD.		36		36
540060	REINFORCING BARS GRADE 60	LBS	1,061	152	758	1,971
543030	METAL RAILING, TYPE D	LIN. FT.		32		32
570413	12" STORM DRAIN CULVERT PIPE	LIN. FT.			240	240
570419	15" STORM DRAIN CULVERT PIPE	LIN. FT.	138		43	181
570425	18" STORM DRAIN CULVERT PIPE	LIN. FT.	911		450	1,361
570437	24" STORM DRAIN CULVERT PIPE	LIN. FT.	503		185	688
570449	30" STORM DRAIN CULVERT PIPE	LIN. FT.			1,340	1,340
570453	30" STORM DRAIN CULVERT PIPE END SECTION	EACH			1	1
601000	REMOVAL OF STRUCTURES & OBSTRUCTION	L.S.	0.7	0.04	0.26	1
601110	REMOVAL OF SURFACING	SQ. YD.	11,410	568	4,077	16,055
602000	RIP RAP CLASS A	CU. YD.	20			20
603281	SWPPP PLAN PREPARATION AND MAINTENANCE	L.S.	0.70	0.04	0.26	1
604110	COMPOSITE GEOTEXTILE DRAINAGE FABRIC	SQ. YD.	55			55
605100	18" VERTICAL DRAINS (18" ADS NYLOPLAST DRAIN BASIN INC. FRAME & COVER)	LIN. FT.	16			16
605100	24" VERTICAL DRAINS (24" ADS NYLOPLAST DRAIN BASIN INC. FRAME & COVER)	LIN. FT.	15		4	19
605100	30" VERTICAL DRAINS (30" ADS NYLOPLAST DRAIN BASIN INC. FRAME & COVER)	LIN. FT.	12		13	25
605100	30" VERTICAL DRAINS (30" ADS NYLOPLAST W/ PREFORATED DRAIN BASIN (2830) W/ OPE GRATE INC. FRAME & GRATE)	EACH	9			9
606590	CONCRETE WALL BARRIER 42" (MODIFIED)	LIN. FT.	1,445	0	0	1,445
608004	CONCRETE SIDEWALK 4"	SQ. YD.	960	65	495	1,520
608108	DRIVE PAD 8"	SQ. YD.	595	82	206	883
609324	CONCRETE SLOPED CURB & GUTTER 6"X24"	LIN. FT.	97	0	0	97
609418	CONCRETE VERTICAL CURB & GUTTER TYPE B 6"X18"	LIN. FT.	2,880	203	1,112	4,195
609424	CONCRETE VERTICAL CURB & GUTTER TYPE B 6"X24"	LIN. FT.	1,621	198	1,081	2,900

SUMMARY OF QUANTITIES

ITEM NUMBER	DESCRIPTION	UNIT	BID LOT 1 ESTIMATED QUANTITY BOP TO 41+00	BID LOT 3 ESTIMATED QUANTITY 41+00 TO 43+00	BID LOT 2 ESTIMATED QUANTITY 43+00 TO EOP	TOTAL PROJECT ESTIMATED QUANTITY
618000	TRAFFIC CONTROL MANAGEMENT	L.S.	0.70	0.04	0.26	1
621000	MOBILIZATION	L.S.	0.70	0.04	0.26	1
623300	2'X2' CURB DROP INLET	EACH			6	6
623300	2'X3' CURB DROP INLET	EACH			1	1
623400	2'X2' DROP INLET	EACH	3			3
623400	2'X3' DROP INLET	EACH	2			2
624000	SLOPE PROTECTION WIRE MESH	SQ. YD.	50			50
662010	MANHOLE TYPE C - 6' DIAMETER 0' TO 6' DEPTH	EACH			1	1
662022	MANHOLE TYPE C - 6' DIAMETER OVER 6' TO 10' DEPTH	EACH			2	2
662400	MANHOLE ADJUSTMENT	EACH	4	0	0	4
663100	FIRE HYDRANT	EACH	3	0	0	3
663105	REMOVE AND RESET EXISTING FIRE HYDRANT	EACH	1	0	0	1
663855	ADJUST VALVE BOX TO GRADE	EACH	9	0	2	11
663866	REMOVE AND REPLACE WATER METER	EACH	36	1	1	38
667130	MAILBOX INSTALLATION MULTIPLE	EACH	2	0	0	2
667500	4" STEEL BOLLARDS	EACH	2			2
701000	PANEL SIGNS	SQ. FT.	150	15	40	205
701100	STEEL POST AND BASE POST FOR ALUMINUM PANEL SIGNS	LIN. FT.	200	25	55	280
702810	TRAFFIC CONTROL DEVICES FOR CONSTRUCTION	L.S.	0.70	0.04	0.26	1
704204	RETROREFLECTORIZED PLASTIC PAVEMENT STRIPE 4"	LIN. FT.	11,883	800	4,067	16,750
704212	RETROREFLECTORIZED PLASTIC PAVEMENT STRIPE 12"	LIN. FT.	316	0	49	365
705000	SIGNAL/LIGHTING SYSTEM START-UP COSTS	ALLOW	1			1
706010	SERVICE POLE (LIGHTING)	EACH	1			1
706210	METER PEDESTAL (LIGHTING)	EACH	1			1
706420	LIGHTING CONTROL CABINET - TWO CIRCUIT	EACH	1			1
707018	TYPE I STANDARD, 18'	EACH	1		1	2
707020	RIGID ELECTRICAL CONDUIT 2" (DIA)	LIN. FT.	1,900	200	1,080	3,180
707801	REMOVE AND RESET TYPE I STANDARD COMPLETE	EACH	1	0	0	1
710000	ELECTRICAL PULL BOX (STANDARD)	EACH	1	0	1	2
711210	SINGLE CONDUCTOR 1/0	LIN. FT.	3,800	400	2,160	6,360
712010	1 SECTION TRAFFIC SIGNAL ASSEMBLY	EACH	2	0	2	4
801000	CONSTRUCTION STAKING BY THE CONTRACTOR	L.S.	0.70	0.04	0.26	1
802000	POST CONSTRUCTION PLANS	L.S.	0.70	0.04	0.26	1
	TESTING LABORATORY ALLOWANCE	ALLOW				0
	UTILITY RELOCATION ALLOWANCE	ALLOW				0

MOLZENCORBIN
1155 Commerce Dr., Suite F
Las Cruces, New Mexico 88011
575 522 0049 office
575 522 7884 fax
MolzenCorbin.com

WYATT D. KARTCHNER
NEW MEXICO
20843
2/23/16
REGISTERED PROFESSIONAL ENGINEER

REV NO	REV DATE	DESCRIPTION
2	2/23/16	ROAD AND DRAIN REVISIONS
1	10/27/15	ADDED DRAINAGE ITEMS

PROJECT NUMBER: CRS133-12
DESIGNED BY: WDK
DRAWN BY: EG
CHECKED BY: JTM
PROJ ENGINEER: WDK
PROJECT DATE: OCTOBER 2015

QUANTITIES

CALLAWAY DRIVE
CITY OF CARLSBAD
CARLSBAD, NEW MEXICO

G-003
SHEET

I:\CARLSBAD\CRS133-12-Callaway Design\DWG\GCA133-003.dwg

© COPYRIGHT

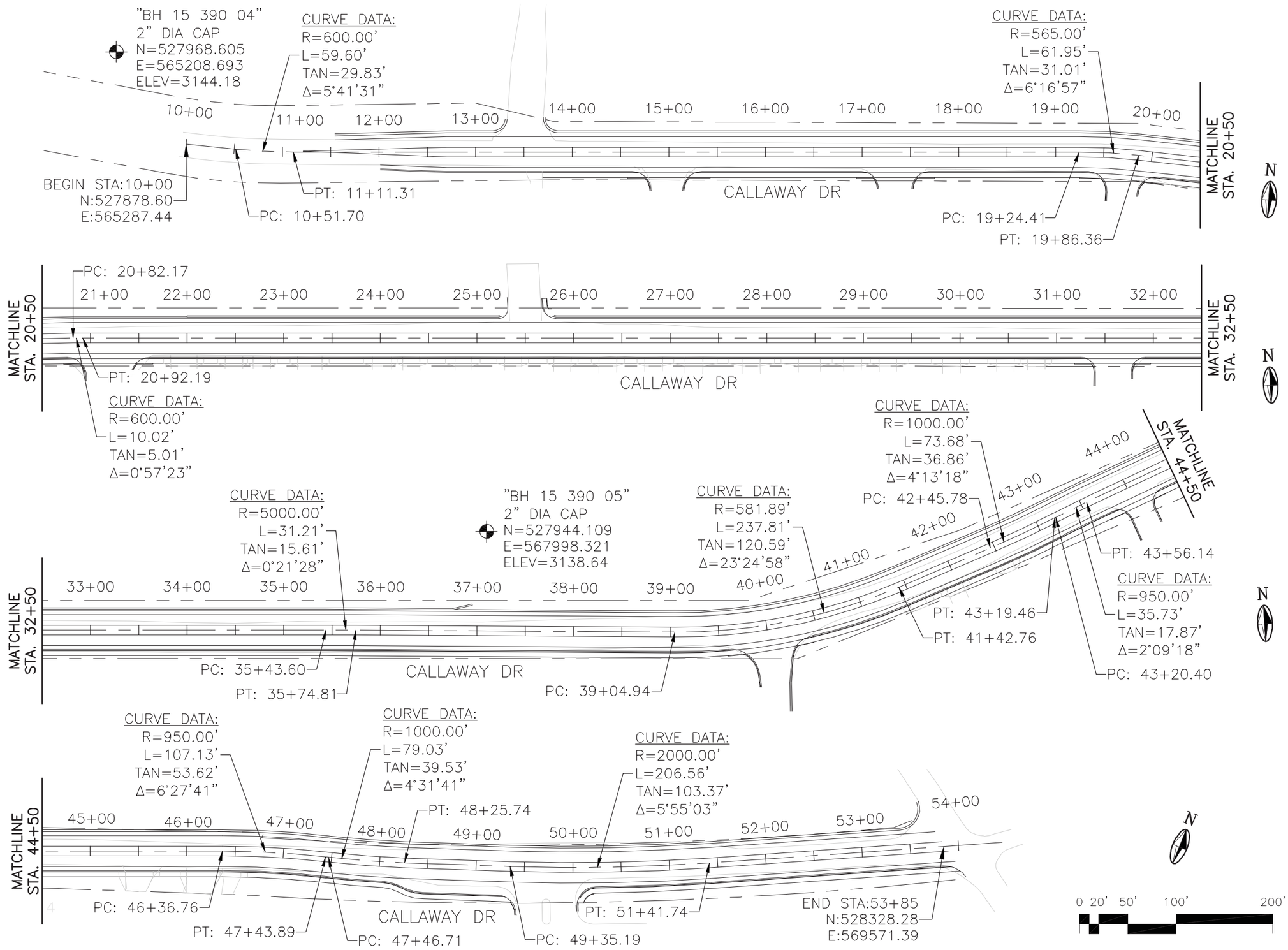

MOLZENCORBIN
1155 Commerce Dr., Suite F
Las Cruces, New Mexico 88011
575 522 0049 office
575 522 7884 fax
MolzenCorbin.com

WYATT D. KARTCHNER
NEW MEXICO
20843
REGISTERED PROFESSIONAL ENGINEER
10/15/15

REV NO	REV DATE	DESCRIPTION

PROJECT NUMBER:	CRS133-12
DESIGNED BY:	WDK
DRAWN BY:	EG
CHECKED BY:	JTM
PROJ ENGINEER:	WDK
PROJECT DATE:	OCTOBER 2015

ALIGNMENT CONTROL
AND SURVEY CONTROL

CALLAWAY DRIVE
CITY OF CARLSBAD
CARLSBAD, NEW MEXICO

C-100

SHEET

© COPYRIGHT

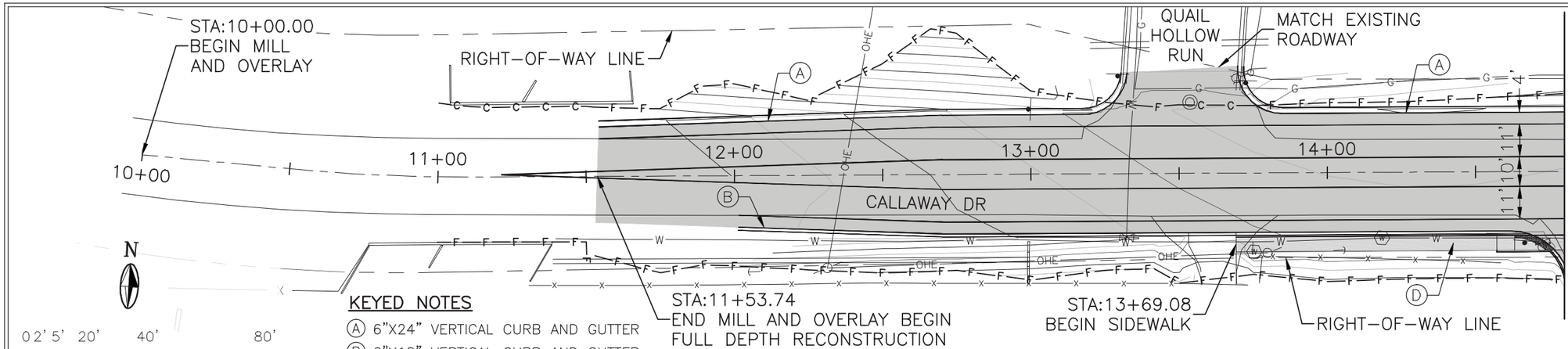

KEYED NOTES

- (A) 6"X24" VERTICAL CURB AND GUTTER
- (B) 6"X18" VERTICAL CURB AND GUTTER
- (C) 42" CONCRETE WALL BARRIER
- (D) 4" CONCRETE SIDEWALK

CALLAWAY DRIVE

SCALE: 1"=40' HORZ
1"=20' VERT

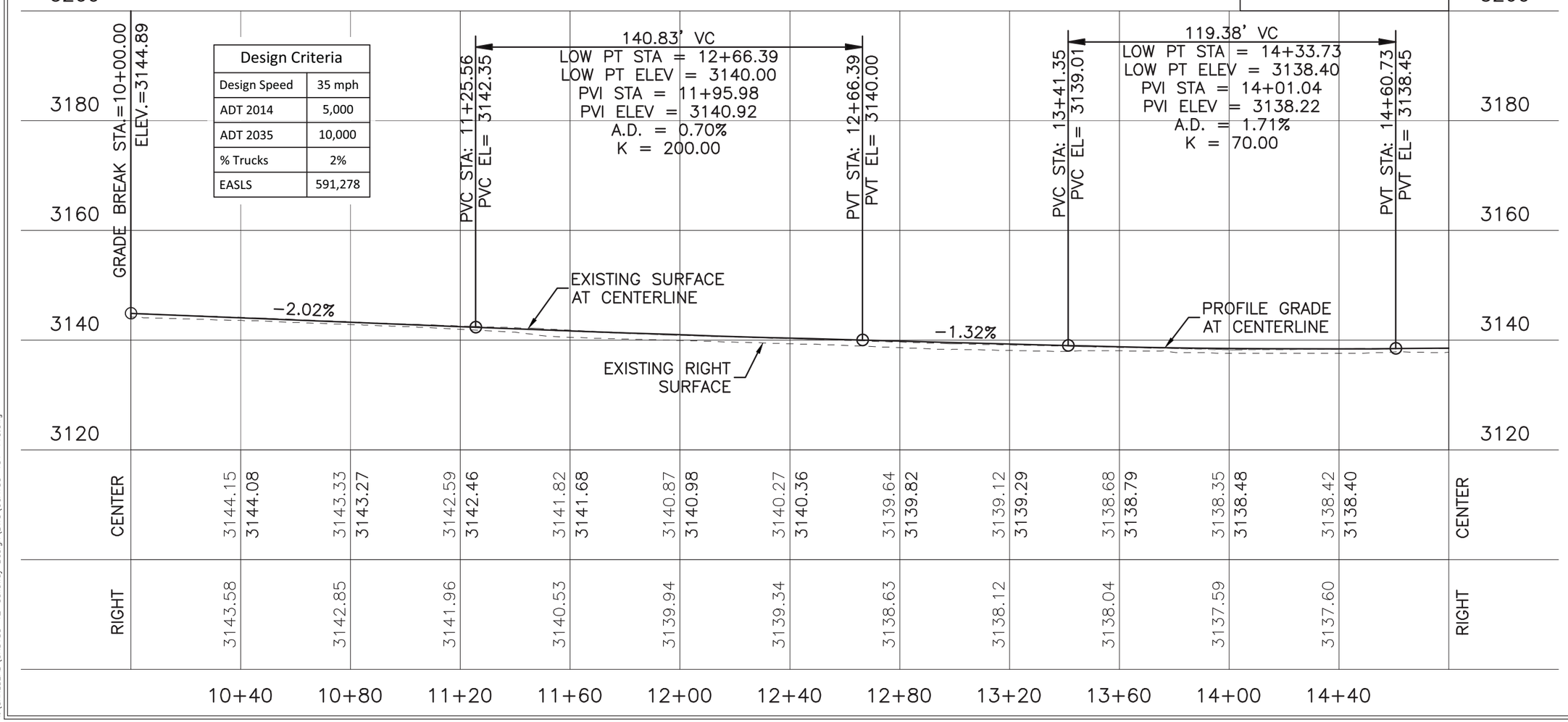

Design Criteria	
Design Speed	35 mph
ADT 2014	5,000
ADT 2035	10,000
% Trucks	2%
EASLS	591,278

MOLZENCORBIN
1155 Commerce Dr., Suite F
Las Cruces, New Mexico 88011
575 522 0049 office
575 522 7884 fax
MolzenCorbin.com

WYATT D. KARTCHNER
NEW MEXICO
20843
2/23/16
REGISTERED PROFESSIONAL ENGINEER

REV NO	REV DATE	DESCRIPTION
1	2/23/16	ROAD AND DRAIN REVISIONS

PROJECT NUMBER: CRS133-12
DESIGNED BY: WDK
DRAWN BY: EG
CHECKED BY: JTM
PROJ ENGINEER: WDK
PROJECT DATE: OCTOBER 2015

CALLAWAY DRIVE
PLAN AND PROFILE
STA. 10+00 TO STA. 14+80

CALLAWAY DRIVE
CITY OF CARLSBAD
CARLSBAD, NEW MEXICO

C-101
SHEET

I:\CARLSBAD\CRS133-12-Callaway Design\DWG\CCA133-101-110.dwg

© COPYRIGHT

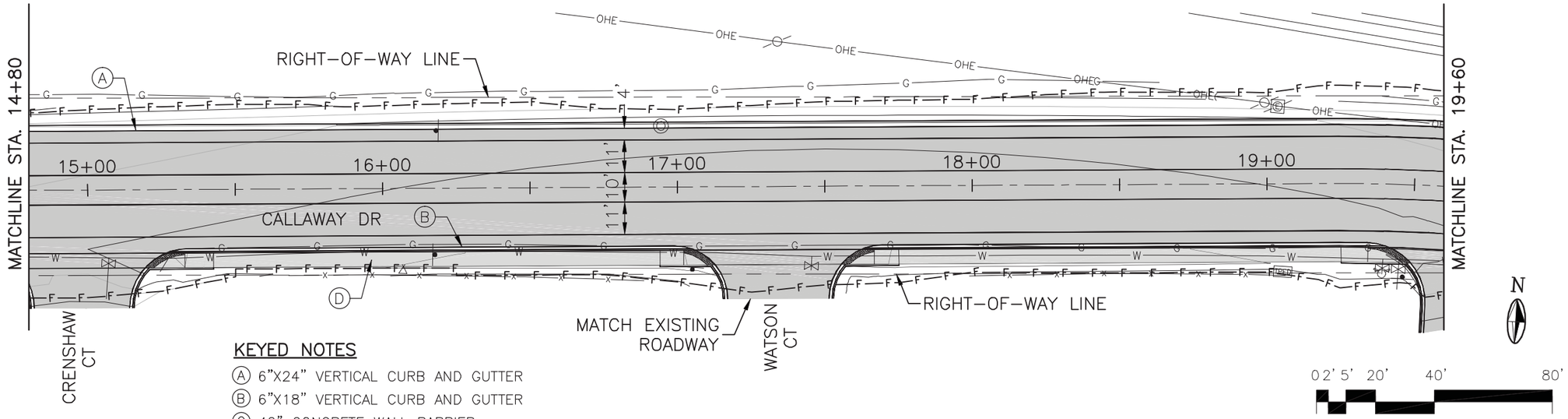

KEYED NOTES

- (A) 6"X24" VERTICAL CURB AND GUTTER
- (B) 6"X18" VERTICAL CURB AND GUTTER
- (C) 42" CONCRETE WALL BARRIER
- (D) 4" CONCRETE SIDEWALK

SCALE: 1"=40' HORZ
1"=20' VERT

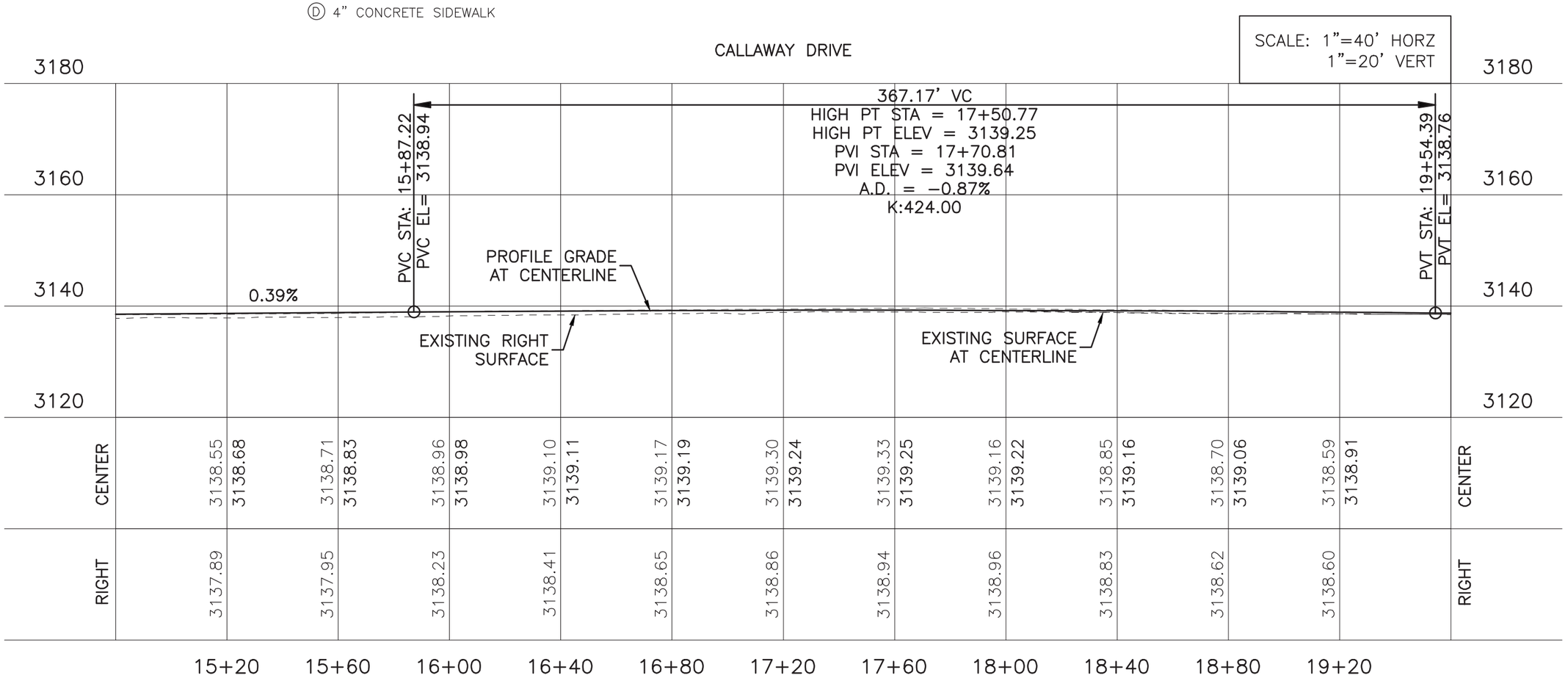

MOLZENCORBIN
1155 Commerce Dr., Suite F
Las Cruces, New Mexico 88011
575 522 0049 office
575 522 7884 fax
MolzenCorbin.com

WYATT D. KARTCHNER
NEW MEXICO
20843
2/23/16
REGISTERED PROFESSIONAL ENGINEER

REV NO	REV DATE	DESCRIPTION
1	2/23/16	ROAD AND DRAIN REVISIONS

PROJECT NUMBER: CRS133-12
DESIGNED BY: WDK
DRAWN BY: EG
CHECKED BY: JTM
PROJ ENGINEER: WDK
PROJECT DATE: OCTOBER 2015

CALLAWAY DRIVE
PLAN AND PROFILE
STA. 14+80 TO STA. 19+60

CALLAWAY DRIVE
CITY OF CARLSBAD
CARLSBAD, NEW MEXICO

C-102
SHEET

I:\CARLSBAD\CRS133-12-Callaway Design\DWG\CCA133-101-110.dwg

© COPYRIGHT

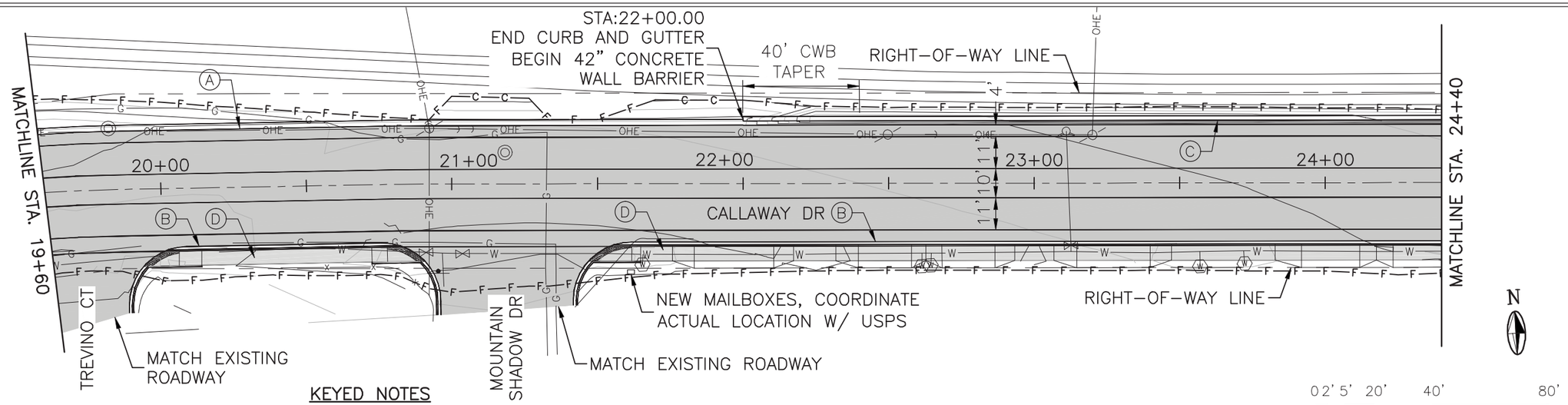

KEYED NOTES

- (A) 6"X24" VERTICAL CURB AND GUTTER
- (B) 6"X18" VERTICAL CURB AND GUTTER
- (C) 42" CONCRETE WALL BARRIER
- (D) 4" CONCRETE SIDEWALK

CALLAWAY DRIVE

SCALE: 1"=40' HORZ
1"=20' VERT

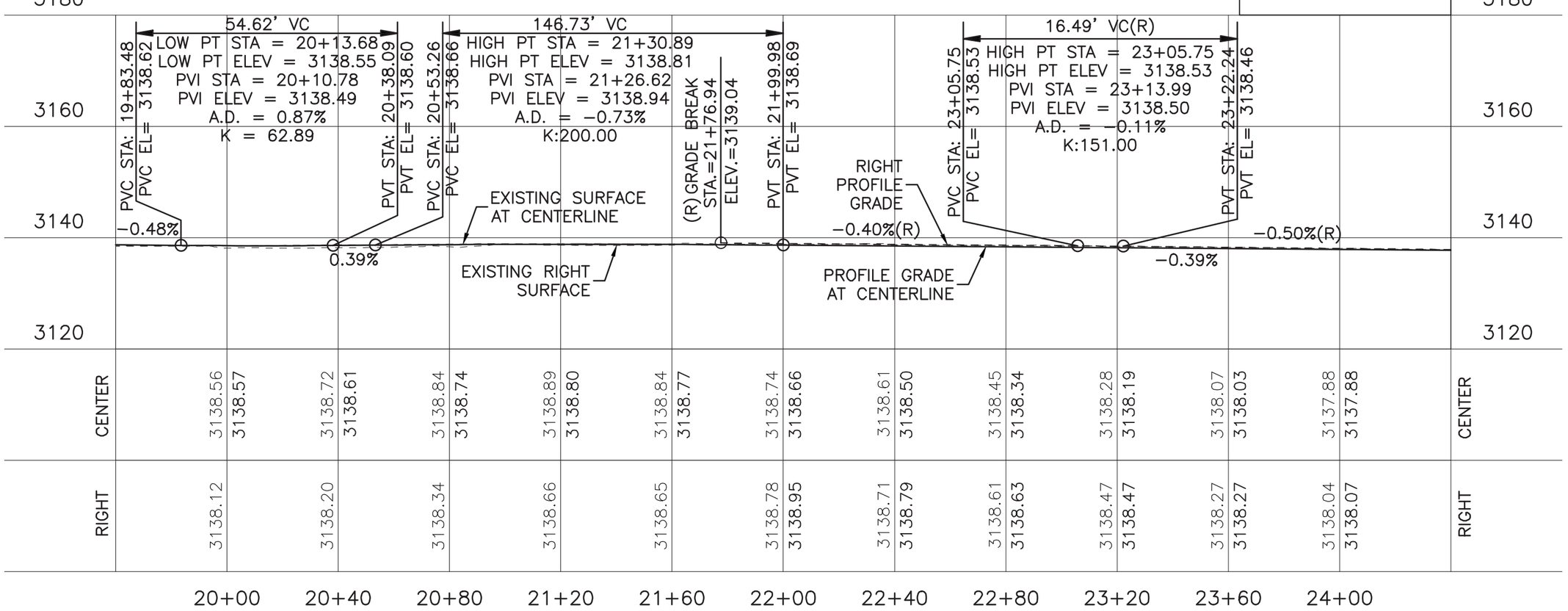

MOLZENCORBIN
1155 Commerce Dr., Suite F
Las Cruces, New Mexico 88011
575 522 0049 office
575 522 7884 fax
MolzenCorbin.com

WYATT D. KARTCHNER
NEW MEXICO
20843
REGISTERED PROFESSIONAL ENGINEER
10/15/15

REV NO	REV DATE	DESCRIPTION

PROJECT NUMBER: CRS133-12
DESIGNED BY: WDK
DRAWN BY: EG
CHECKED BY: JTM
PROJ ENGINEER: WDK
PROJECT DATE: OCTOBER 2015

CALLAWAY DRIVE
PLAN AND PROFILE
STA. 19+60 TO STA. 24+40

CALLAWAY DRIVE
CITY OF CARLSBAD
CARLSBAD, NEW MEXICO

SHEET C-103

© COPYRIGHT

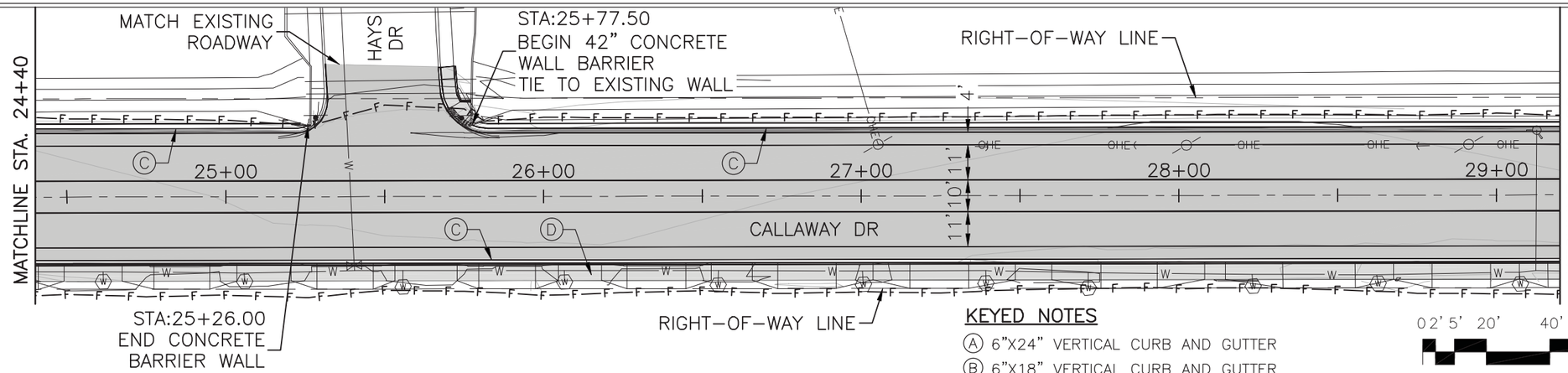

KEYED NOTES

- (A) 6"X24" VERTICAL CURB AND GUTTER
- (B) 6"X18" VERTICAL CURB AND GUTTER
- (C) 42" CONCRETE WALL BARRIER
- (D) 4" CONCRETE SIDEWALK

0 2' 5' 20' 40' 80'

SCALE: 1"=40' HORZ
1"=20' VERT

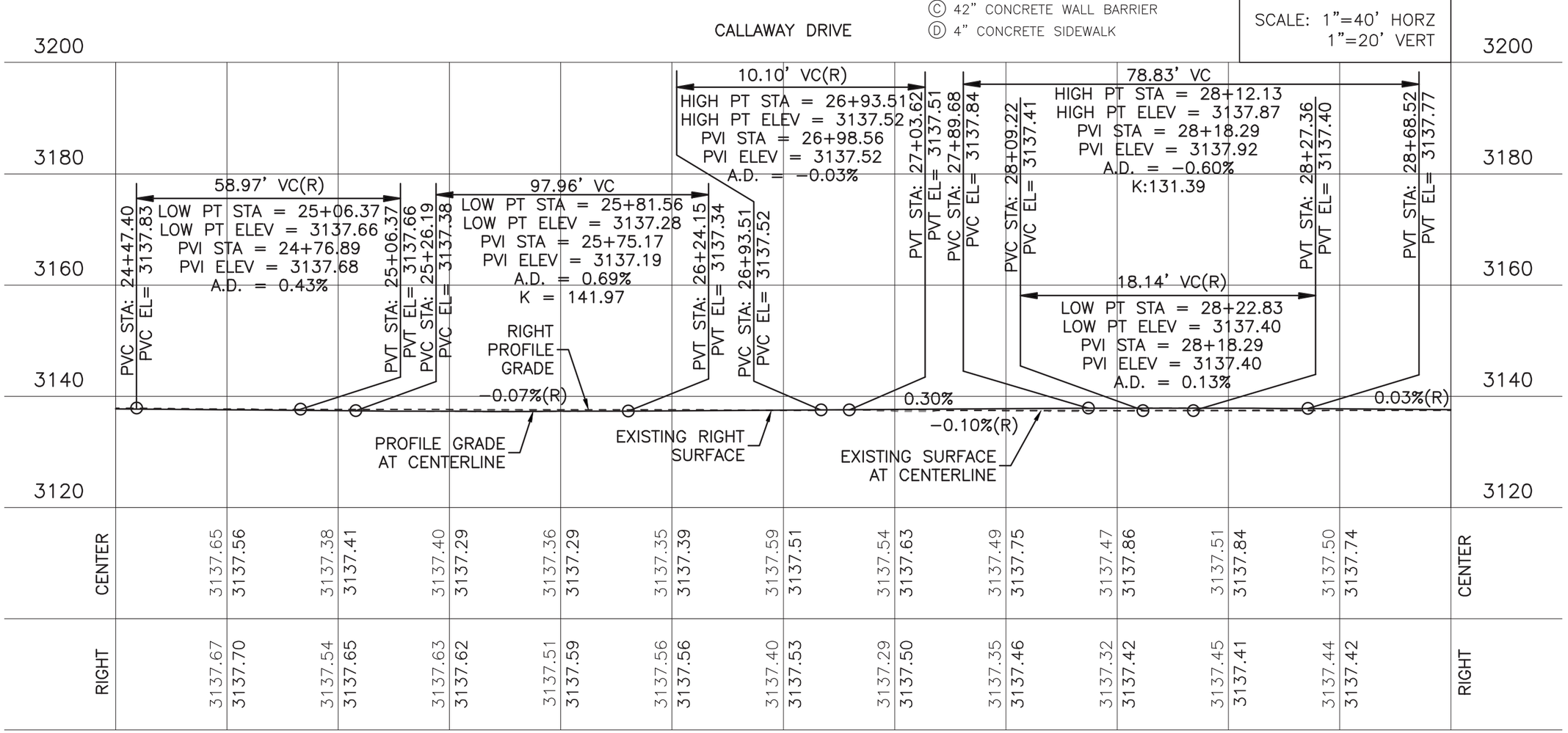

	24+80	25+20	25+60	26+00	26+40	26+80	27+20	27+60	28+00	28+40	28+80
CENTER	3137.65 / 3137.56	3137.38 / 3137.41	3137.40 / 3137.29	3137.36 / 3137.29	3137.35 / 3137.39	3137.59 / 3137.51	3137.54 / 3137.63	3137.49 / 3137.75	3137.47 / 3137.86	3137.51 / 3137.84	3137.50 / 3137.74
RIGHT	3137.67 / 3137.70	3137.54 / 3137.65	3137.63 / 3137.62	3137.51 / 3137.59	3137.56 / 3137.56	3137.40 / 3137.53	3137.29 / 3137.50	3137.35 / 3137.46	3137.32 / 3137.42	3137.45 / 3137.41	3137.44 / 3137.42

MOLZENCORBIN
1155 Commerce Dr., Suite F
Las Cruces, New Mexico 88011
575 522 0049 office
575 522 7884 fax
MolzenCorbin.com

WYATT D. KARTCHNER
NEW MEXICO
20843
REGISTERED PROFESSIONAL ENGINEER
10/15/15

REV NO	REV DATE	DESCRIPTION

PROJECT NUMBER: CRS133-12
DESIGNED BY: WDK
DRAWN BY: EG
CHECKED BY: JTM
PROJ ENGINEER: WDK
PROJECT DATE: OCTOBER 2015

CALLAWAY DRIVE
PLAN AND PROFILE
STA. 24+40 TO STA. 29+20

CALLAWAY DRIVE
CITY OF CARLSBAD
CARLSBAD, NEW MEXICO

C-104
SHEET

© COPYRIGHT

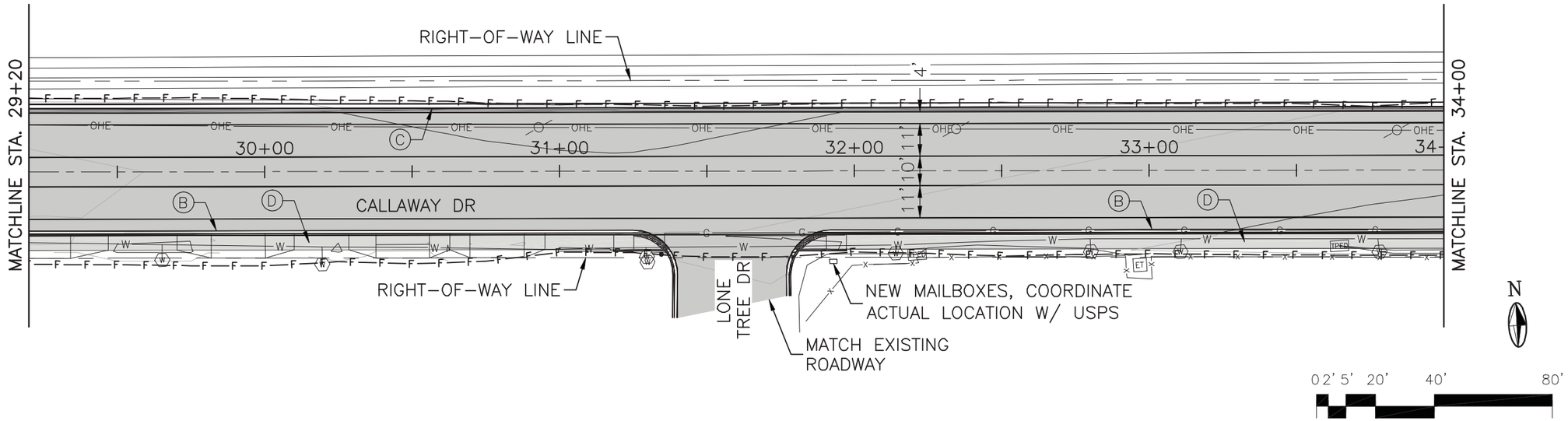

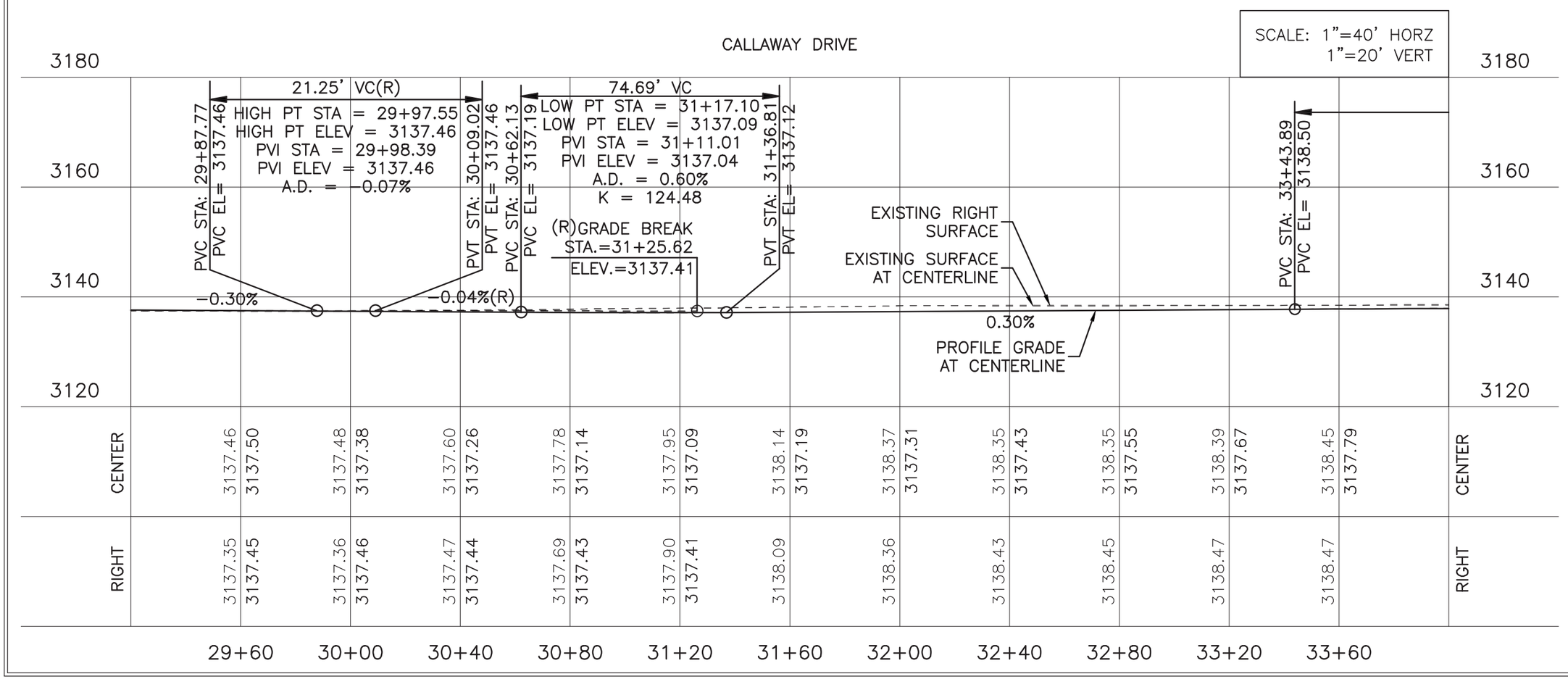

MOLZENCORBIN
1155 Commerce Dr., Suite F
Las Cruces, New Mexico 88011
575 522 0049 office
575 522 7884 fax
MolzenCorbin.com

WYATT D. KARTCHNER
NEW MEXICO
20843
REGISTERED PROFESSIONAL ENGINEER
10/15/15

REV NO	REV DATE	DESCRIPTION

PROJECT NUMBER: CRS133-12
DESIGNED BY: WDK
DRAWN BY: EG
CHECKED BY: JTM
PROJ ENGINEER: WDK
PROJECT DATE: OCTOBER 2015

CALLAWAY DRIVE
PLAN AND PROFILE
STA. 29+20 TO STA. 34+00

CALLAWAY DRIVE
CITY OF CARLSBAD
CARLSBAD, NEW MEXICO

SHEET C-105

© COPYRIGHT

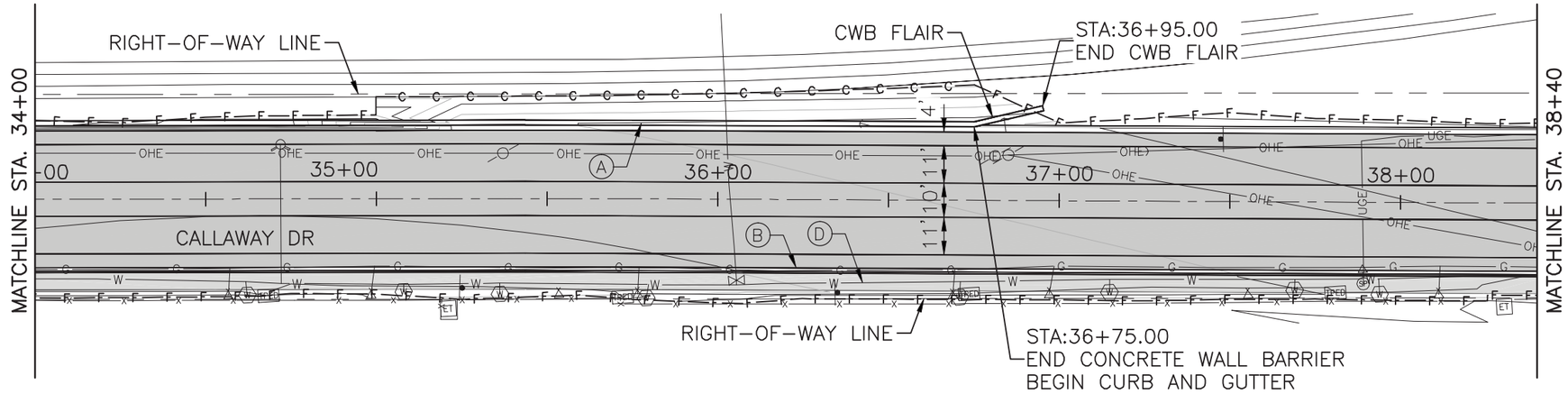

KEYED NOTES

- (A) 6"X24" VERTICAL CURB AND GUTTER
- (B) 6"X18" VERTICAL CURB AND GUTTER
- (C) 42" CONCRETE WALL BARRIER
- (D) 4" CONCRETE SIDEWALK

N

0 2' 5' 20' 40' 80'

SCALE: 1"=40' HORZ
1"=20' VERT

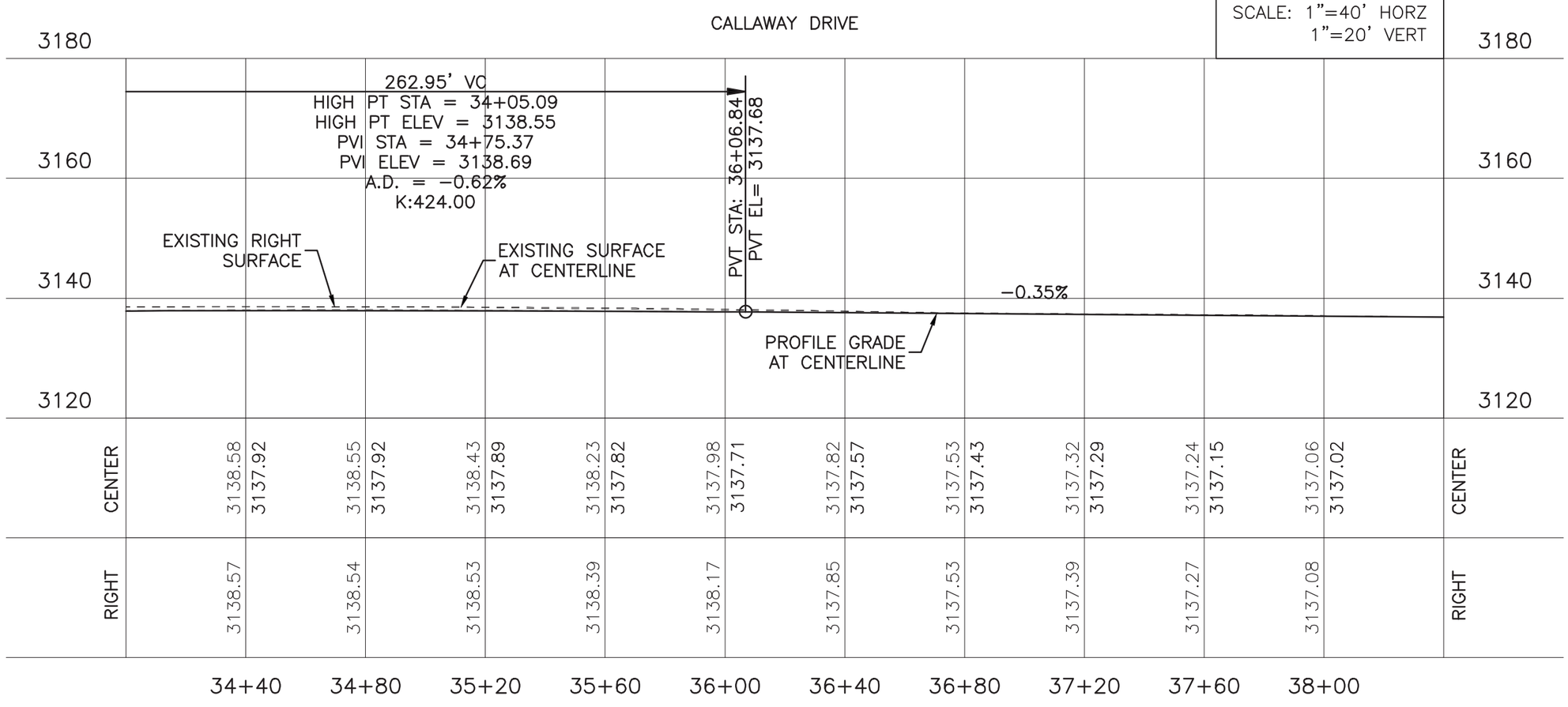

MOLZENCORBIN
1155 Commerce Dr., Suite F
Las Cruces, New Mexico 88011
575 522 0049 office
575 522 7884 fax
MolzenCorbin.com

WYATT D. KARTCHNER
NEW MEXICO
20843
10/15/15
REGISTERED PROFESSIONAL ENGINEER

REV NO	REV DATE	DESCRIPTION

PROJECT NUMBER:	CRS133-12
DESIGNED BY:	WDK
DRAWN BY:	EG
CHECKED BY:	JTM
PROJ ENGINEER:	WDK
PROJECT DATE:	OCTOBER 2015

CALLAWAY DRIVE
PLAN AND PROFILE
STA. 34+00 TO STA. 38+40

CALLAWAY DRIVE
CITY OF CARLSBAD
CARLSBAD, NEW MEXICO

SHEET C-106

© COPYRIGHT

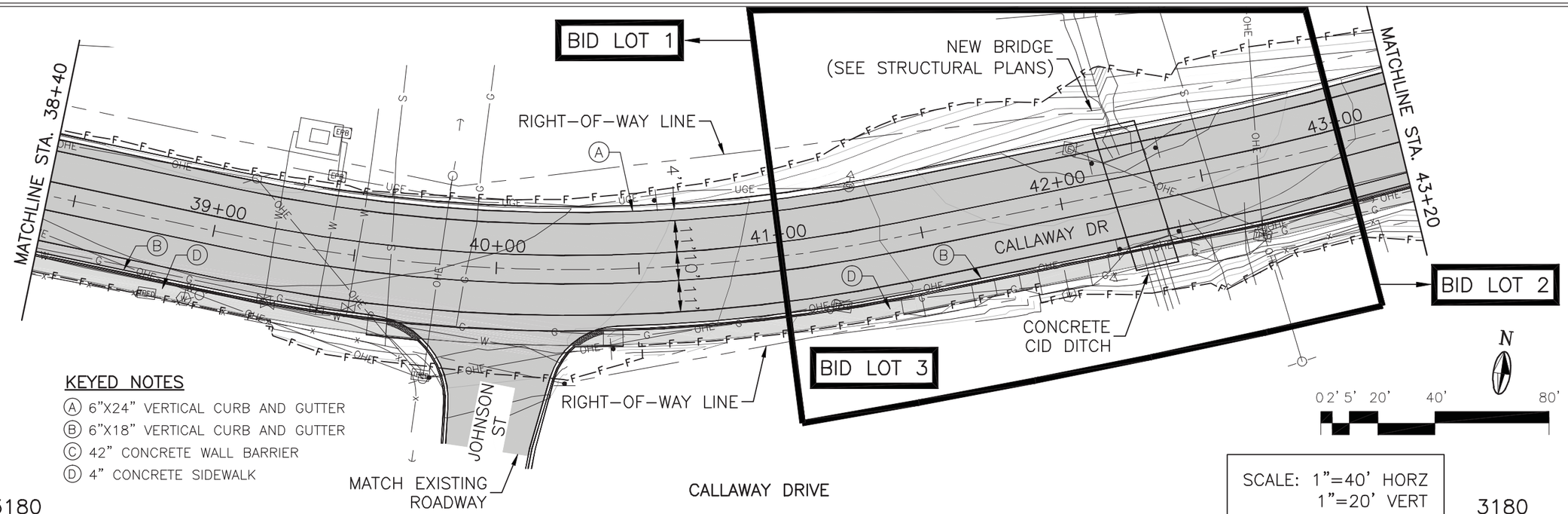

KEYED NOTES

- (A) 6"X24" VERTICAL CURB AND GUTTER
- (B) 6"X18" VERTICAL CURB AND GUTTER
- (C) 42" CONCRETE WALL BARRIER
- (D) 4" CONCRETE SIDEWALK

SCALE: 1"=40' HORZ
1"=20' VERT

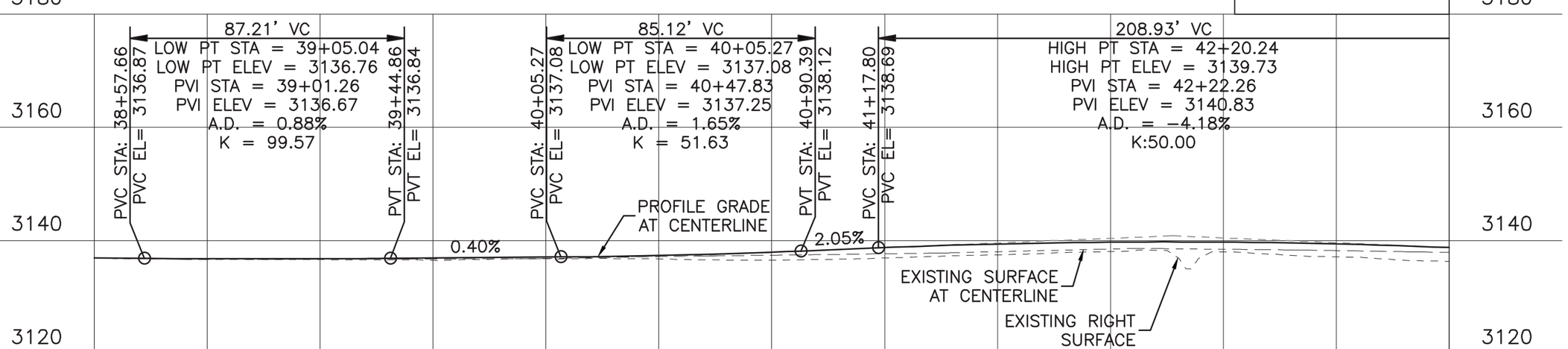

	38+80	39+20	39+60	40+00	40+40	40+80	41+20	41+60	42+00	42+40	42+80
CENTER	3136.65 / 3136.76	3136.68 / 3136.77	3136.71 / 3136.90	3136.81 / 3137.06	3137.13 / 3137.34	3137.38 / 3137.92	3137.63 / 3138.73	3138.01 / 3139.37	3138.49 / 3139.69	3138.44 / 3139.70	3138.20 / 3139.38
RIGHT	3136.69	3136.61	3136.47	3136.74	3136.74	3136.51	3136.89	3137.44	3138.02	3137.94	3137.10

MOLZENCORBIN
1155 Commerce Dr., Suite F
Las Cruces, New Mexico 88011
575 522 0049 office
575 522 7884 fax
MolzenCorbin.com

WYATT D. KARTCHNER
NEW MEXICO
20843
2/23/16
REGISTERED PROFESSIONAL ENGINEER

REV NO	REV DATE	DESCRIPTION
1	2/23/16	ROAD AND DRAIN REVISIONS

PROJECT NUMBER: CRS133-12
DESIGNED BY: WDK
DRAWN BY: EG
CHECKED BY: JTM
PROJ ENGINEER: WDK
PROJECT DATE: OCTOBER 2015

CALLAWAY DRIVE
PLAN AND PROFILE
STA. 38+40 TO STA. 43+20

CALLAWAY DRIVE
CITY OF CARLSBAD
CARLSBAD, NEW MEXICO

C-107
SHEET

I:\CARLSBAD\CRS133-12-Callaway Design\DWG\CCA133-101-110.dwg

© COPYRIGHT

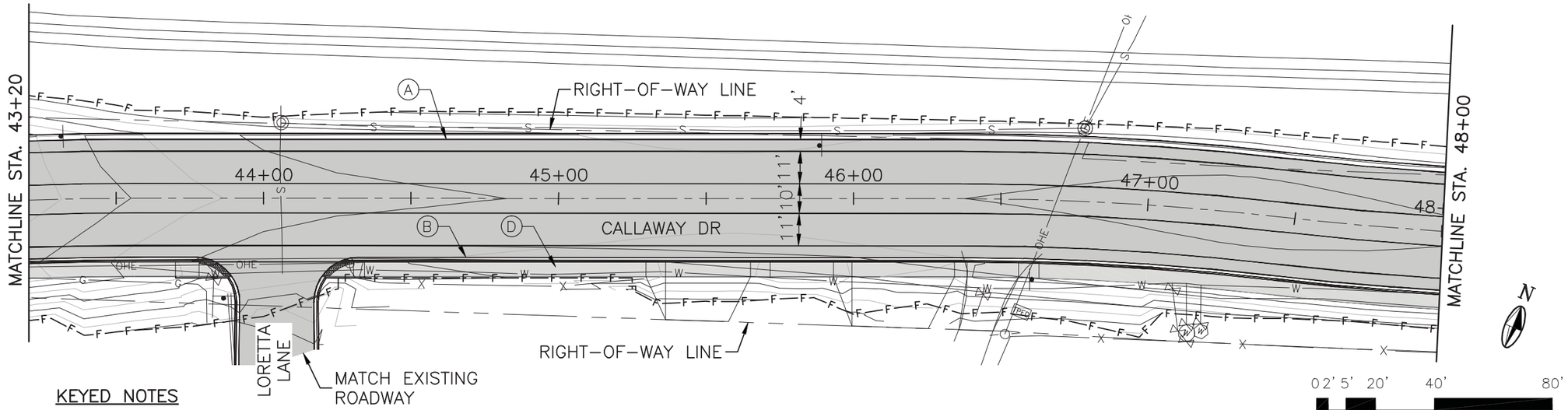

KEYED NOTES

Ⓐ 6"X24" VERTICAL CURB AND GUTTER
Ⓑ 6"X18" VERTICAL CURB AND GUTTER
Ⓒ 42" CONCRETE WALL BARRIER
Ⓓ 4" CONCRETE SIDEWALK

CALLAWAY DRIVE

SCALE: 1"=40' HORZ
1"=20' VERT

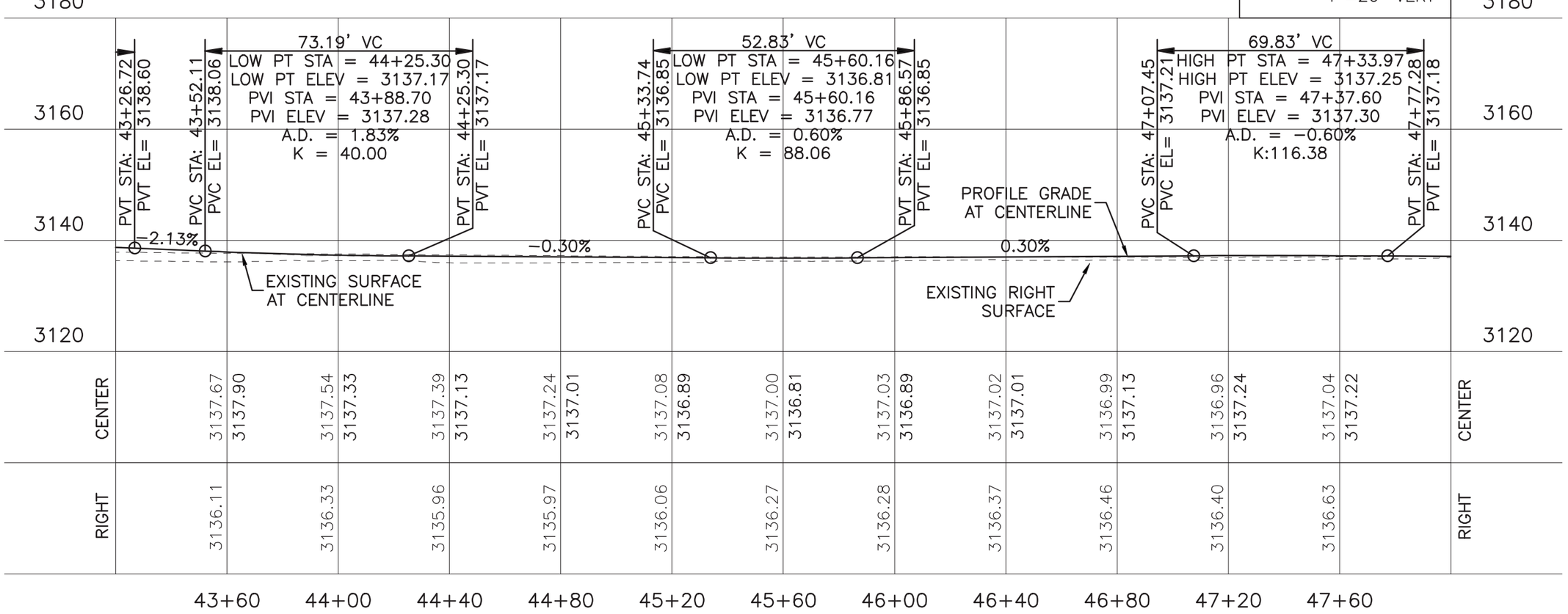

MOLZENCORBIN
1155 Commerce Dr., Suite F
Las Cruces, New Mexico 88011
575 522 0049 office
575 522 7884 fax
MolzenCorbin.com

WYATT D. KARTCHNER
NEW MEXICO
20843
10/15/15
REGISTERED PROFESSIONAL ENGINEER

REV NO	REV DATE	DESCRIPTION

PROJECT NUMBER: CRS133-12
DESIGNED BY: WDK
DRAWN BY: EG
CHECKED BY: JTM
PROJ ENGINEER: WDK
PROJECT DATE: OCTOBER 2015

CALLAWAY DRIVE
PLAN AND PROFILE
STA. 43+20 TO STA. 48+00

CALLAWAY DRIVE
CITY OF CARLSBAD
CARLSBAD, NEW MEXICO

SHEET C-108

© COPYRIGHT

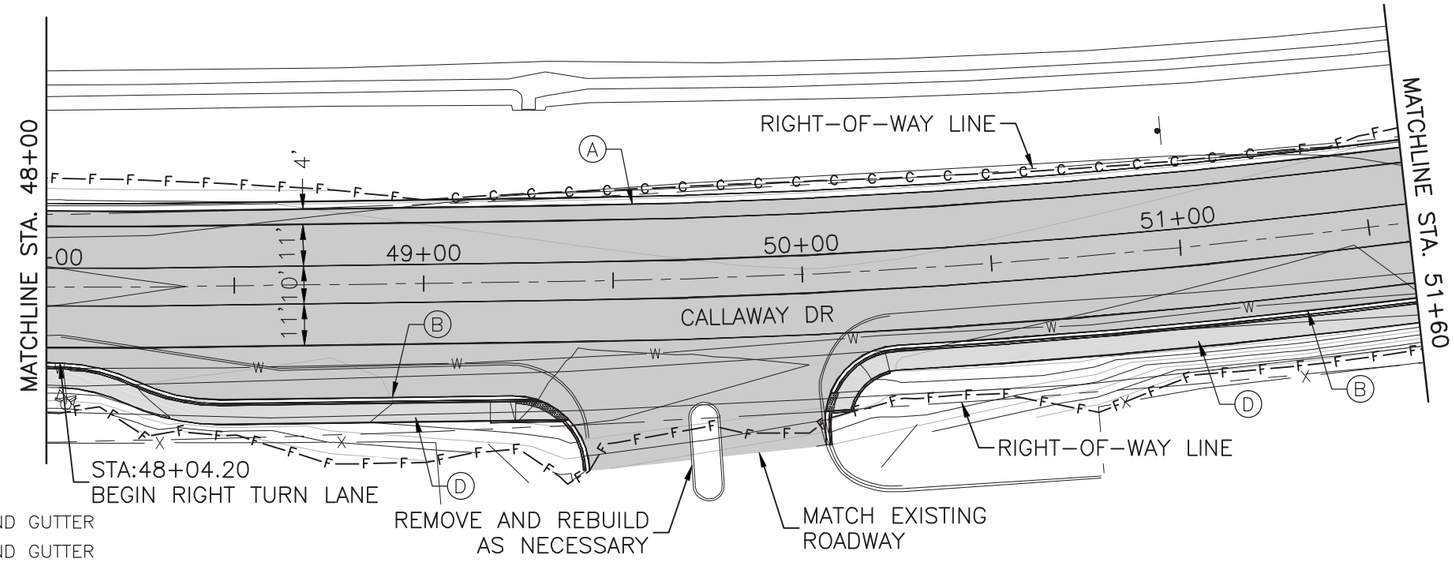

KEYED NOTES

- (A) 6"X24" VERTICAL CURB AND GUTTER
- (B) 6"X18" VERTICAL CURB AND GUTTER
- (C) 42" CONCRETE WALL BARRIER
- (D) 4" CONCRETE SIDEWALK

0 2' 5' 20' 40' 80'

SCALE: 1"=40' HORZ
1"=20' VERT

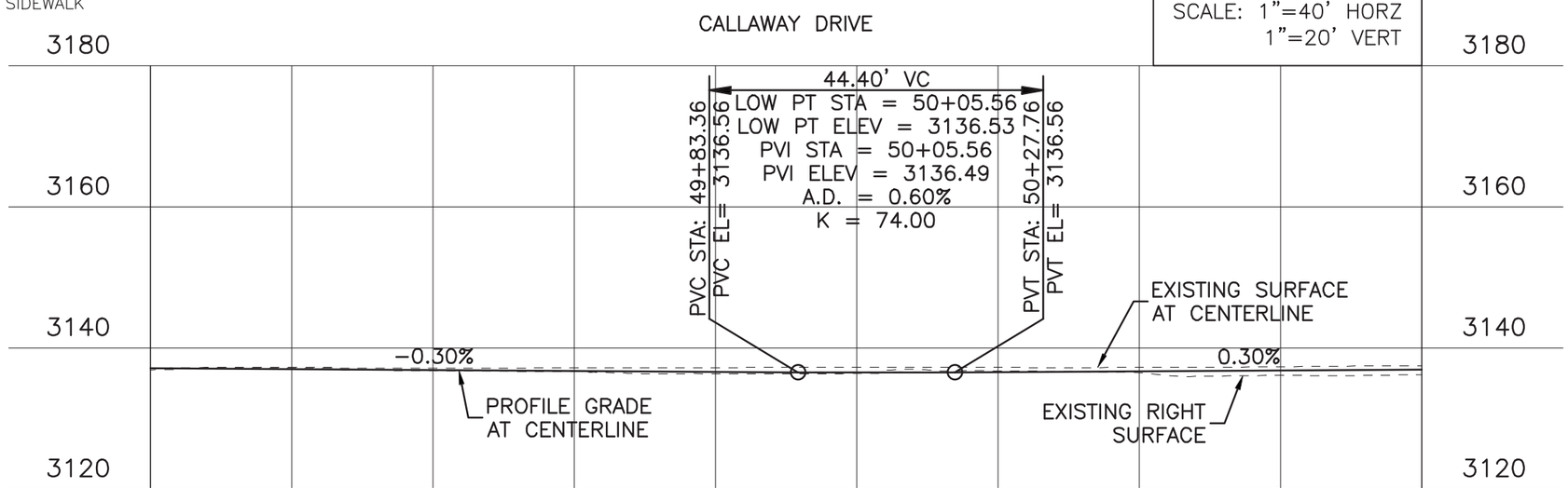

	48+40	48+80	49+20	49+60	50+00	50+40	50+80	51+20
CENTER	3137.14 / 3136.99	3137.13 / 3136.87	3137.18 / 3136.75	3137.22 / 3136.63	3137.24 / 3136.53	3137.23 / 3136.60	3137.24 / 3136.72	3137.34 / 3136.84
RIGHT	3137.25	3136.78	3136.65	3136.35	3136.39	3136.76	3136.49	3136.13

MOLZENCORBIN
1155 Commerce Dr., Suite F
Las Cruces, New Mexico 88011
575 522 0049 office
575 522 7884 fax
MolzenCorbin.com

WYATT D. KARTCHNER
NEW MEXICO
20843
REGISTERED PROFESSIONAL ENGINEER
10/15/15

REV NO	REV DATE	DESCRIPTION

PROJECT NUMBER: CRS133-12
DESIGNED BY: WDK
DRAWN BY: EG
CHECKED BY: JTM
PROJ ENGINEER: WDK
PROJECT DATE: OCTOBER 2015

CALLAWAY DRIVE
PLAN AND PROFILE
STA. 48+00 TO STA. 51+60

CALLAWAY DRIVE
CITY OF CARLSBAD
CARLSBAD, NEW MEXICO

C-109
SHEET

© COPYRIGHT

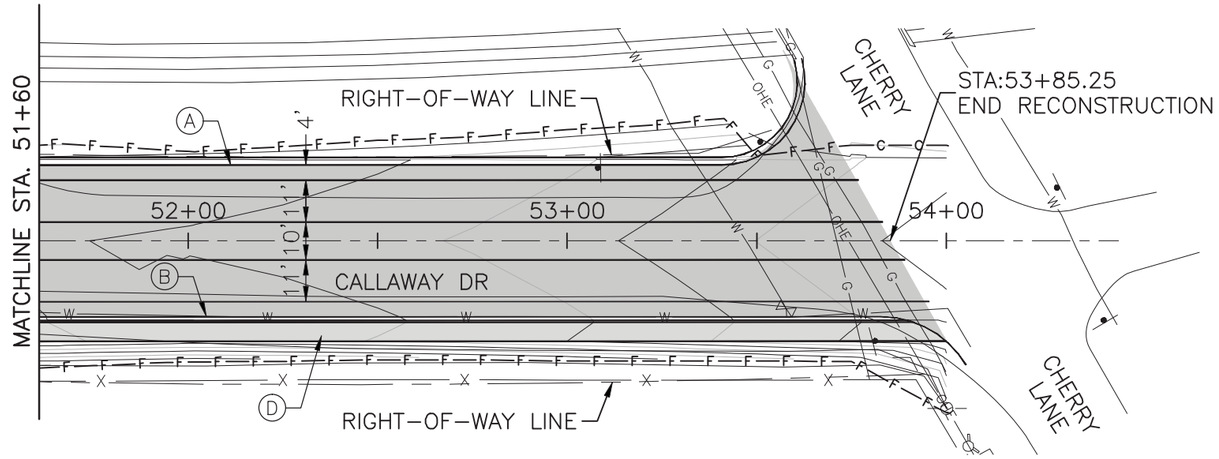

KEYED NOTES

- (A) 6"X24" VERTICAL CURB AND GUTTER
- (B) 6"X18" VERTICAL CURB AND GUTTER
- (C) 42" CONCRETE WALL BARRIER
- (D) 4" CONCRETE SIDEWALK

0 2' 5' 20' 40' 80'

N

SCALE: 1"=40' HORZ
1"=20' VERT

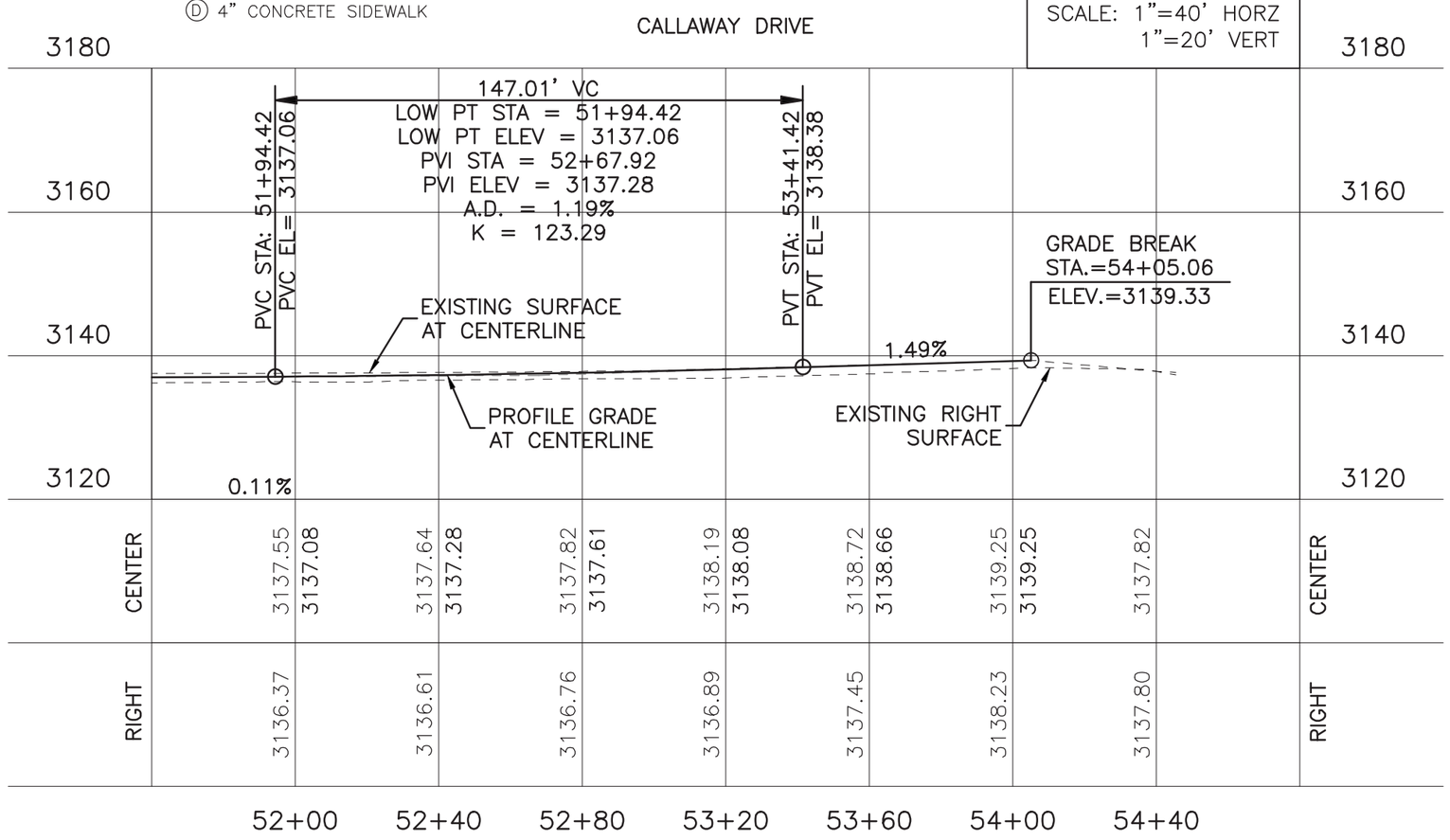

MOLZENCORBIN
1155 Commerce Dr., Suite F
Las Cruces, New Mexico 88011
575 522 0049 office
575 522 7884 fax
MolzenCorbin.com

WYATT D. KARTCHNER
NEW MEXICO
20843
10/15/15
REGISTERED PROFESSIONAL ENGINEER

REV NO	REV DATE	DESCRIPTION

PROJECT NUMBER: CRS133-12
DESIGNED BY: WDK
DRAWN BY: EG
CHECKED BY: JTM
PROJ ENGINEER: WDK
PROJECT DATE: OCTOBER 2015

CALLAWAY DRIVE
PLAN AND PROFILE
STA. 51+60 TO END

CALLAWAY DRIVE
CITY OF CARLSBAD
CARLSBAD, NEW MEXICO

C-110
SHEET

© COPYRIGHT

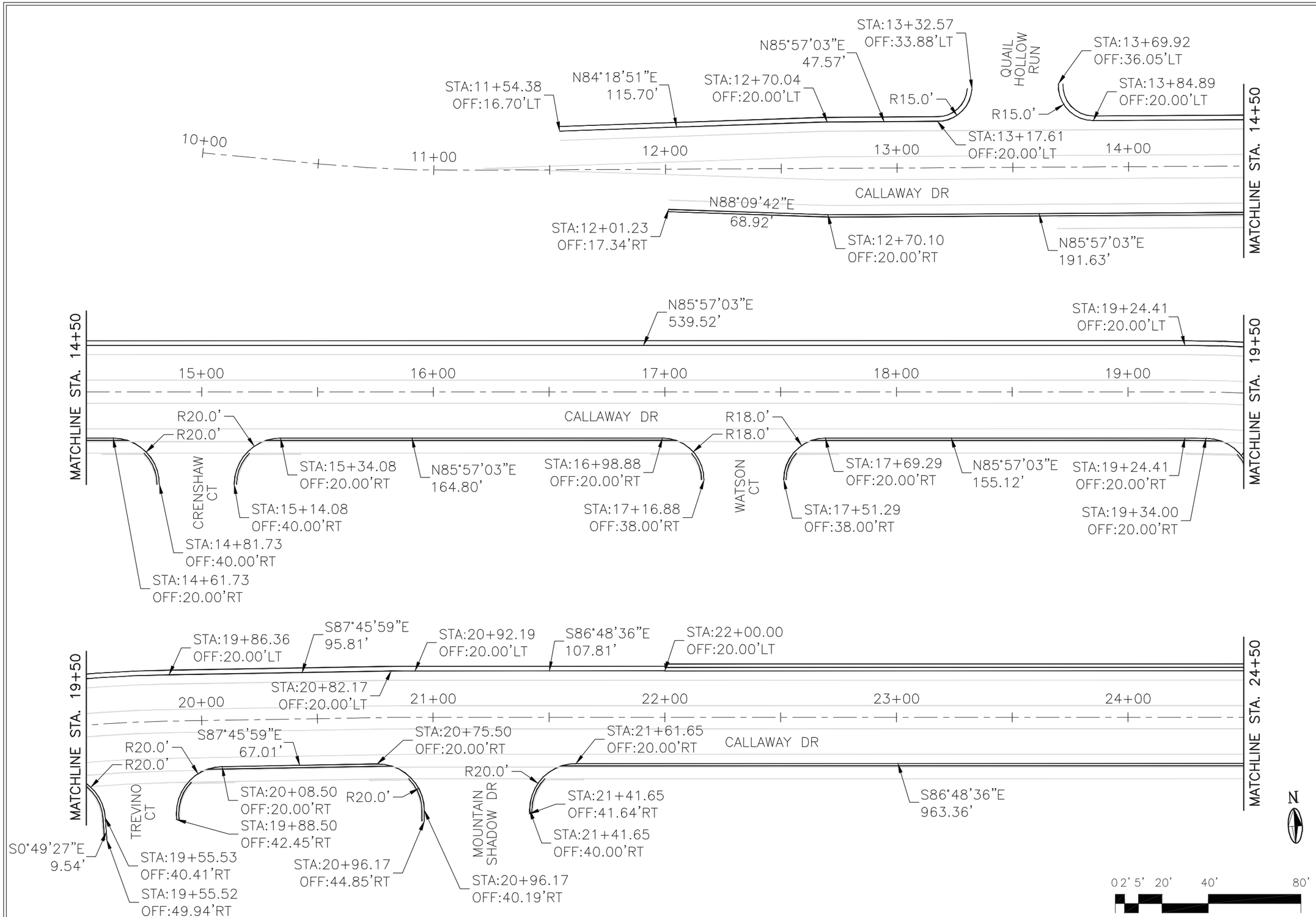

MOLZENCORBIN
1155 Commerce Dr., Suite F
Las Cruces, New Mexico 88011
575 522 0049 office
575 522 7884 fax
MolzenCorbin.com

WYATT D. KARTCHNER
NEW MEXICO
20843
10/15/15
REGISTERED PROFESSIONAL ENGINEER

REV NO	REV DATE	DESCRIPTION

PROJECT NUMBER:	CRS133-12
DESIGNED BY:	WDK
DRAWN BY:	EG
CHECKED BY:	JTM
PROJ ENGINEER:	WDK
PROJECT DATE:	OCTOBER 2015

CALLAWAY DRIVE
CURBING LAYOUT

CALLAWAY DRIVE
CITY OF CARLSBAD
CARLSBAD, NEW MEXICO

SHEET
C-111

© COPYRIGHT

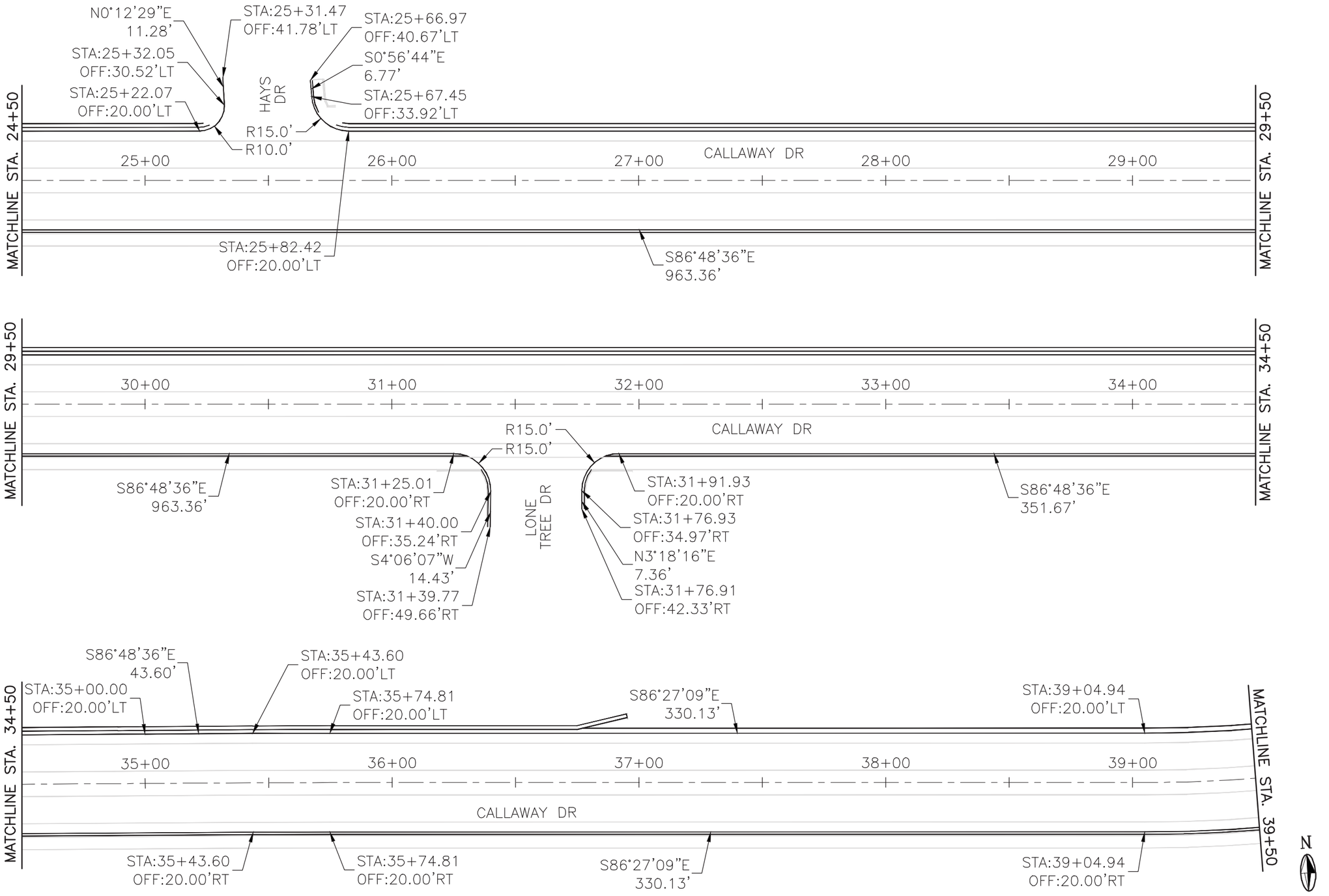

MOLZENCORBIN
1155 Commerce Dr., Suite F
Las Cruces, New Mexico 88011
575 522 0049 office
575 522 7884 fax
MolzenCorbin.com

WYATT D. KARTCHNER
NEW MEXICO
20843
10/15/15
REGISTERED PROFESSIONAL ENGINEER

REV NO	REV DATE	DESCRIPTION

PROJECT NUMBER:	CRS133-12
DESIGNED BY:	WDK
DRAWN BY:	EG
CHECKED BY:	JTM
PROJ ENGINEER:	WDK
PROJECT DATE:	OCTOBER 2015

CALLAWAY DRIVE
CURBING LAYOUT

CALLAWAY DRIVE
CITY OF CARLSBAD
CARLSBAD, NEW MEXICO

SHEET
C-112

© COPYRIGHT

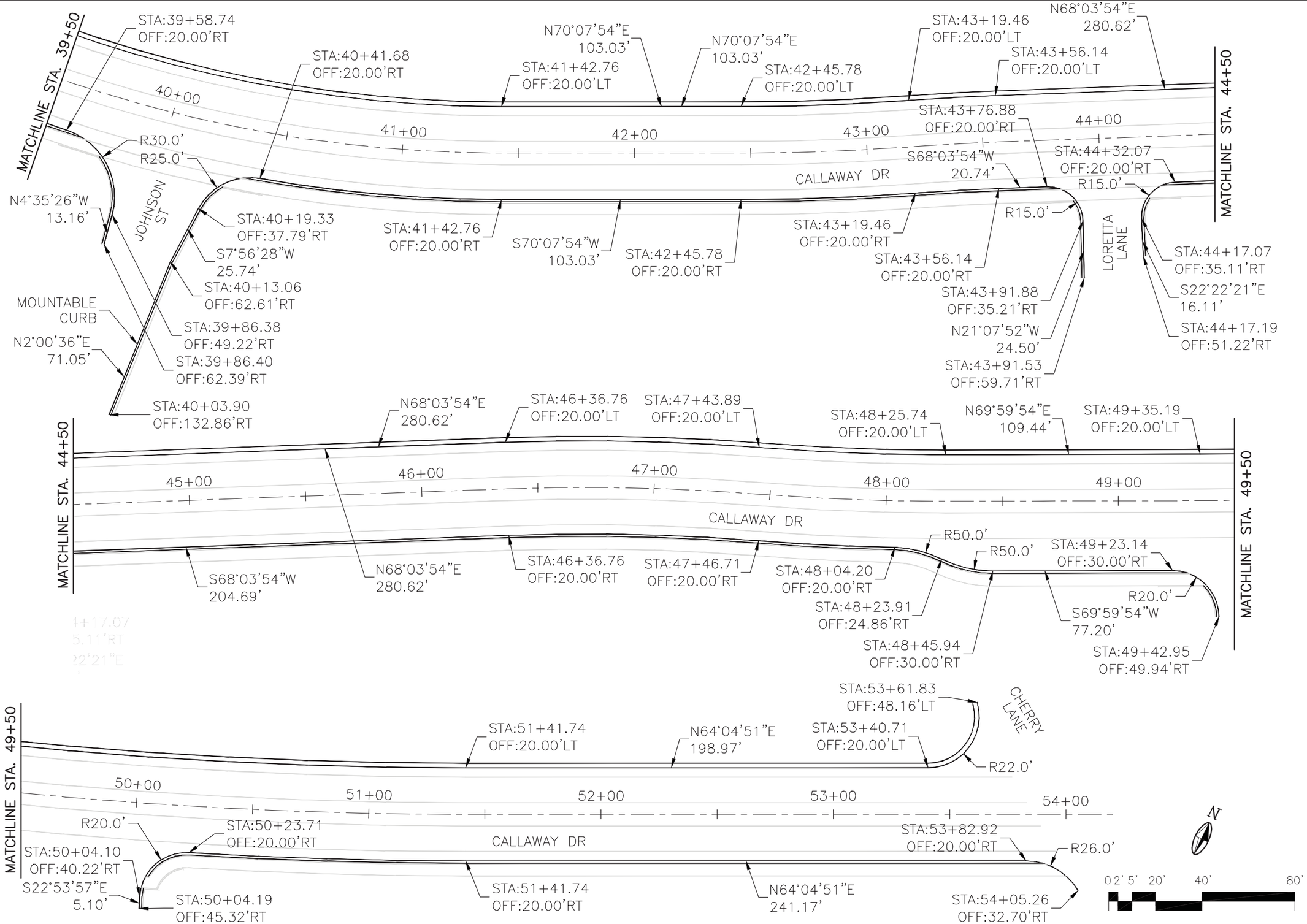

MOLZENCORBIN

1155 Commerce Dr., Suite F
Las Cruces, New Mexico 88011
575 522 0049 office
575 522 7884 fax
MolzenCorbin.com

WYATT D. KARTCHNER
NEW MEXICO
20843
10/15/15
REGISTERED PROFESSIONAL ENGINEER

REV NO	REV DATE	DESCRIPTION

PROJECT NUMBER:	CRS133-12
DESIGNED BY:	WDK
DRAWN BY:	EG
CHECKED BY:	JTM
PROJ ENGINEER:	WDK
PROJECT DATE:	OCTOBER 2015

CALLAWAY DRIVE
CURBING LAYOUT

CALLAWAY DRIVE
CITY OF CARLSBAD
CARLSBAD, NEW MEXICO

SHEET C-113

© COPYRIGHT

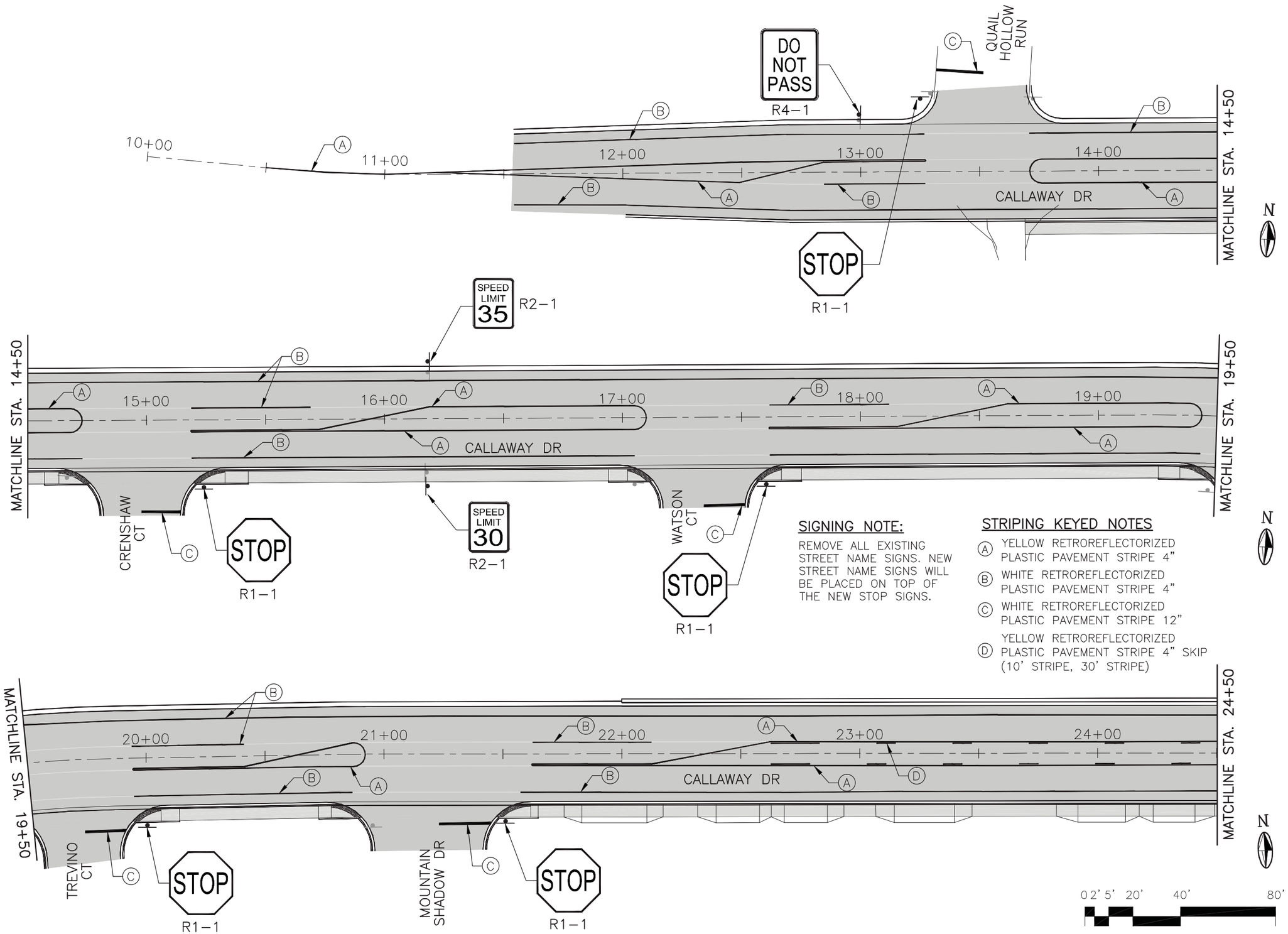

SIGNING NOTE:

REMOVE ALL EXISTING STREET NAME SIGNS. NEW STREET NAME SIGNS WILL BE PLACED ON TOP OF THE NEW STOP SIGNS.

STRIPING KEYED NOTES

- (A) YELLOW RETROREFLECTORIZED PLASTIC PAVEMENT STRIPE 4"
- (B) WHITE RETROREFLECTORIZED PLASTIC PAVEMENT STRIPE 4"
- (C) WHITE RETROREFLECTORIZED PLASTIC PAVEMENT STRIPE 12"
- (D) YELLOW RETROREFLECTORIZED PLASTIC PAVEMENT STRIPE 4" SKIP (10' STRIPE, 30' STRIPE)

MOLZENCORBIN
1155 Commerce Dr., Suite F
Las Cruces, New Mexico 88011
575 522 0049 office
575 522 7884 fax
MolzenCorbin.com

WYATT D. KARTCHNER
NEW MEXICO
20843
10/15/15
REGISTERED PROFESSIONAL ENGINEER

REV NO	REV DATE	DESCRIPTION

PROJECT NUMBER: CRS133-12
DESIGNED BY: WDK
DRAWN BY: EG
CHECKED BY: JTM
PROJ ENGINEER: WDK
PROJECT DATE: OCTOBER 2015

CALLAWAY DRIVE
PERMANENT SIGNING AND STRIPING

CALLAWAY DRIVE
CITY OF CARLSBAD
CARLSBAD, NEW MEXICO

SHEET C-114

© COPYRIGHT

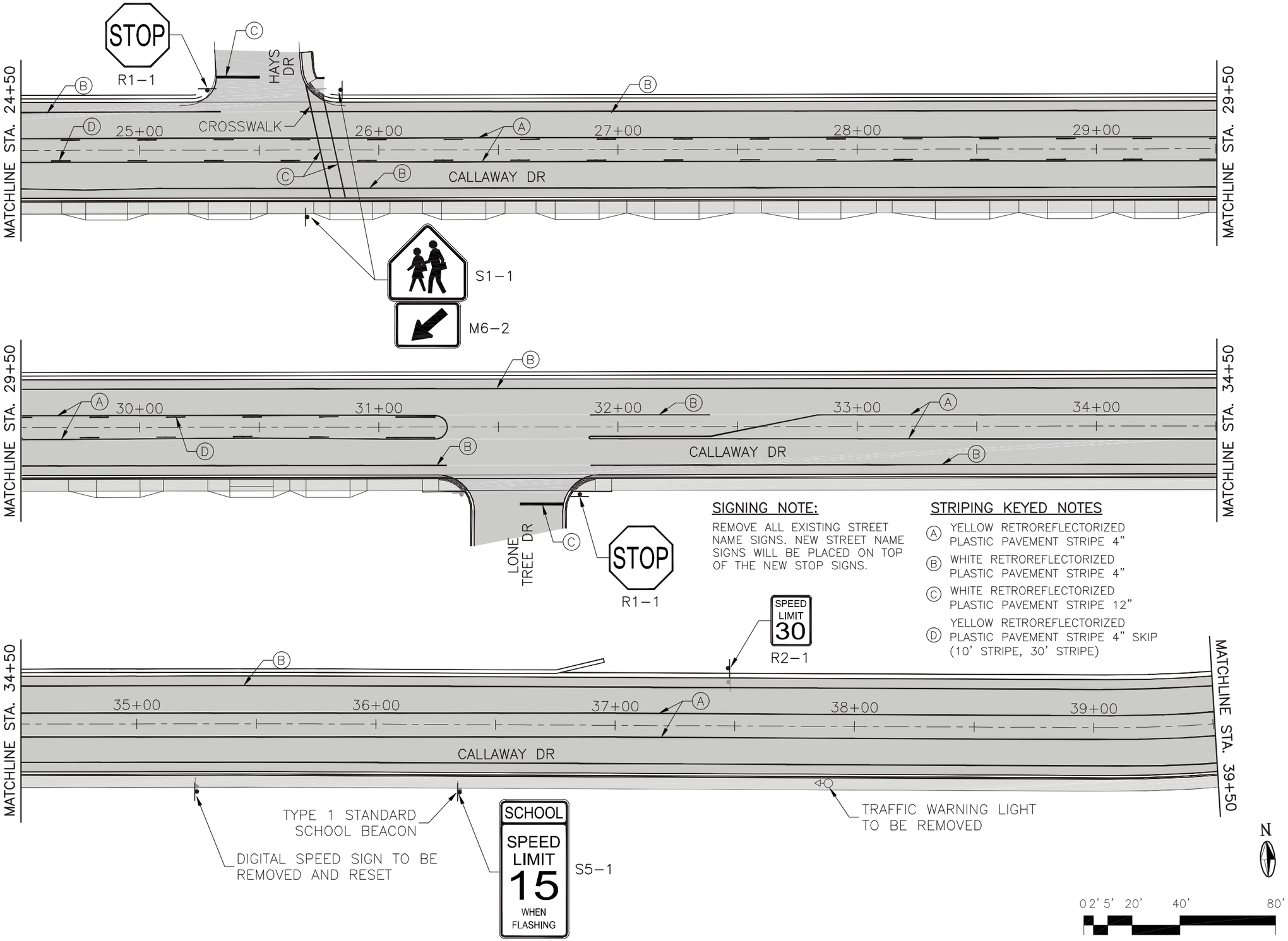

SIGNING NOTE:

REMOVE ALL EXISTING STREET NAME SIGNS. NEW STREET NAME SIGNS WILL BE PLACED ON TOP OF THE NEW STOP SIGNS.

STRIPING KEYED NOTES

- (A) YELLOW RETROREFLECTORIZED PLASTIC PAVEMENT STRIPE 4"
- (B) WHITE RETROREFLECTORIZED PLASTIC PAVEMENT STRIPE 4"
- (C) WHITE RETROREFLECTORIZED PLASTIC PAVEMENT STRIPE 12"
- (D) YELLOW RETROREFLECTORIZED PLASTIC PAVEMENT STRIPE 4" SKIP (10' STRIPE, 30' STRIPE)

MOLZENCORBIN
1155 Commerce Dr., Suite F
Las Cruces, New Mexico 88011
575 522 0049 office
575 522 7884 fax
MolzenCorbin.com

WYATT D. KARTCHNER
NEW MEXICO
20843
2/23/16
REGISTERED PROFESSIONAL ENGINEER

REV NO	REV DATE	DESCRIPTION
1	2/23/16	ROAD AND DRAIN REVISIONS

PROJECT NUMBER: CRS133-12
DESIGNED BY: WDK
DRAWN BY: EG
CHECKED BY: JTM
PROJ ENGINEER: WDK
PROJECT DATE: OCTOBER 2015

CALLAWAY DRIVE
PERMANENT SIGNING AND STRIPING

CALLAWAY DRIVE
CITY OF CARLSBAD
CARLSBAD, NEW MEXICO

C-115
SHEET

I:\CARLSBAD\CRS133-12-Callaway Design\DWG\CCA133-114-116.dwg

© COPYRIGHT

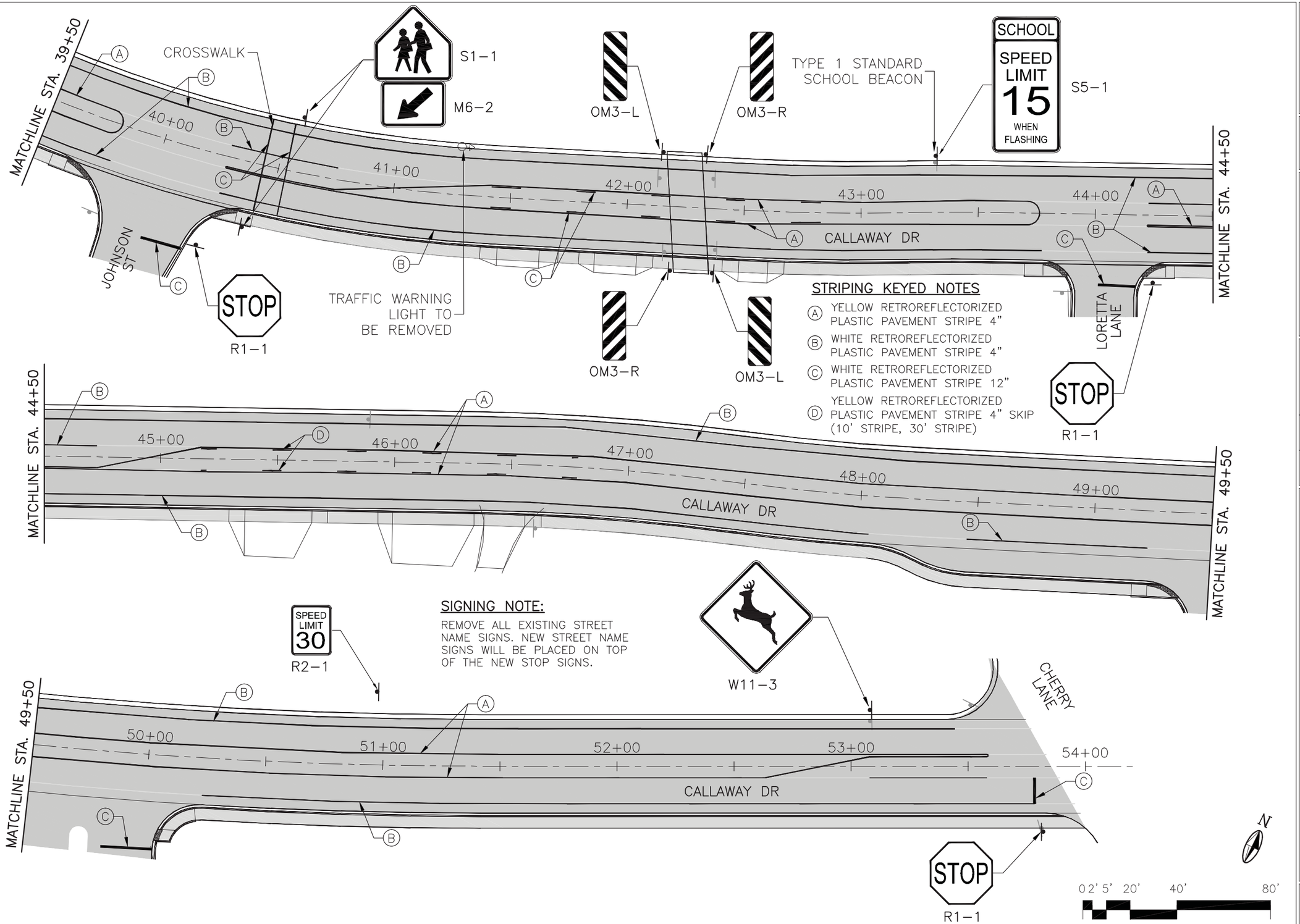

MOLZENCORBIN
1155 Commerce Dr., Suite F
Las Cruces, New Mexico 88011
575 522 0049 office
575 522 7884 fax
MolzenCorbin.com

WYATT D. KARTCHNER
NEW MEXICO
20843
10/15/15
REGISTERED PROFESSIONAL ENGINEER

REV NO	REV DATE	DESCRIPTION

PROJECT NUMBER: CRS133-12
DESIGNED BY: WDK
DRAWN BY: EG
CHECKED BY: JTM
PROJ ENGINEER: WDK
PROJECT DATE: OCTOBER 2015

CALLAWAY DRIVE
PERMANENT SIGNING AND STRIPING

CALLAWAY DRIVE
CITY OF CARLSBAD
CARLSBAD, NEW MEXICO

SHEET C-116

© COPYRIGHT

PERMANENT SIGNING AND STRIPING QUANTITIES			
ITEM NUMBER	ITEM	UNIT	TOTAL
511000	STRUCTURAL CONCRETE, CLASS A	CU.YD.	1.6
540060	REINFORCING BARS GRADE 60	LBS.	55
701000	PANEL SIGN	SQ.FT.	200
701100	STEEL POST AND BASE POST FOR ALUMINUM PANEL SIGNS	LIN.FT.	275
704204	RETROREFLECTORIZED PLASTIC PAVEMENT STRIPE 4"	LIN.FT.	16,750
704212	RETROREFLECTORIZED PLASTIC PAVEMENT STRIPE 12"	LIN.FT.	365
707801	REMOVE & RESET TYPE I STANDARD COMPLETE	EACH	1

MOLZENCORBIN
1155 Commerce Dr., Suite F
Las Cruces, New Mexico 88011
575 522 0049 office
575 522 7884 fax
MolzenCorbin.com

WYATT D. KARTCHNER
NEW MEXICO
20843
REGISTERED PROFESSIONAL ENGINEER
2/23/16

REV NO	REV DATE	DESCRIPTION
1	2/23/16	ROAD AND DRAIN REVISIONS

PROJECT NUMBER: CRS133-12
DESIGNED BY: WDK
DRAWN BY: EG
CHECKED BY: JTM
PROJ ENGINEER: WDK
PROJECT DATE: OCTOBER 2015

CALLAWAY DRIVE
SIGNING AND STRIPING
QUANTITIES

CALLAWAY DRIVE
CITY OF CARLSBAD
CARLSBAD, NEW MEXICO

C-117
SHEET

© COPYRIGHT

I:\CARLSBAD\CRS133-12-Callaway Design\DWG\CCA133-117-120.dwg

PERMANENT SIGN SCHEDULE

INSTALL NO.	ALG	STATION	OFFSET	DESCRIPTION	SIGN CODE	DOMINANT DIRECTION PANEL FACES	LETTER SHEETING TYPE	BACKGROUND SHEETING TYPE	701000			NO. OF SUPPORTS	TYPE OF SUPPORTS	MAX HEIGHT	701100
									PANEL WIDTH (FT)	PANEL HEIGHT (FT)	PANEL AREA (SQ FT)				LENGTH OF SUPPORT (LF)
N1	CALLAWAY	13+00	24.0 L	DO NOT PASS	R4-1	E	VIII	VIII	2	3	6	1	SQ. TUBING	8	10.8
N2	CALLAWAY	13+25	30.6 L	STOP WITH (2) STREET NAME	R1-1; CUSTOM	N	VIII	VIII	2.5; 2.5	2.5; 0.67	9.3	1	SQ. TUBING	7	10.7
N3	CALLAWAY	15+24	28.3 R	STOP WITH (2) STREET NAME	R1-1; CUSTOM	S	VIII	VIII	2.5; 2.5	2.5; 0.67	9.3	1	SQ. TUBING	7	10.7
N4	CALLAWAY	16+18	24.0 L	SPEED LIMIT 35	R2-1	E	VIII	VIII	2	3	6	1	SQ. TUBING	8	10.8
N5	CALLAWAY	16+18	28.3 R	SPEED LIMIT 35	R2-1	W	VIII	VIII	2	3	6	1	SQ. TUBING	8	10.8
N6	CALLAWAY	17+60	28.3 R	STOP WITH (2) STREET NAME	R1-1; CUSTOM	S	VIII	VIII	2.5; 2.5	2.5; 0.67	9.3	1	SQ. TUBING	7	10.7
N7	CALLAWAY	19+20	28.3 R	STOP WITH (2) STREET NAME	R1-1; CUSTOM	S	VIII	VIII	2.5; 2.5	2.5; 0.67	9.3	1	SQ. TUBING	7	10.7
N8	CALLAWAY	21+51	28.3 R	STOP WITH (2) STREET NAME	R1-1; CUSTOM	S	VIII	VIII	2.5; 2.5	2.5; 0.67	9.3	1	SQ. TUBING	7	10.7
N9	CALLAWAY	25+28	25.0 L	STOP WITH (2) STREET NAME	R1-1; CUSTOM	N	VIII	VIII	2.5; 2.5	2.5; 0.67	9.3	1	SQ. TUBING	7	10.7
N10	CALLAWAY	25+70	28.0 R	CROSS WALK; ARROW	S1-1; M6-2	W	VIII	VIII	3; 1.75	3; 1.25	11.2	2	SQ. TUBING	11	15.1
N11	CALLAWAY	25+84	25.0 L	CROSS WALK; ARROW	S1-1; M6-2	E	VIII	VIII	3; 1.75	3; 1.25	11.2	2	SQ. TUBING	11	15.1
N12	CALLAWAY	31+84	28.3 R	STOP WITH (2) STREET NAME	R1-1; CUSTOM	S	VIII	VIII	2.5; 2.5	2.5; 0.67	9.3	1	SQ. TUBING	9	10.7
N13	CALLAWAY	36+35	28.3 R	SCHOOL; SPEED LIMIT 15 WHEN FLASHING	S5-1	W	VIII	VIII	2	3	6	1	SQ. TUBING	8	10.8
N14	CALLAWAY	37+47	24.0 L	SPEED LIMIT 35	R2-1	E	VIII	VIII	2	3	6	1	SQ. TUBING	8	10.8
N15	CALLAWAY	40+24	40.0 R	STOP WITH (2) STREET NAME	R1-1; CUSTOM	S	VIII	VIII	2.5; 2.5	2.5; 0.67	9.3	1	SQ. TUBING	9	10.7
N16	CALLAWAY	40+40	28.3 R	CROSS WALK; ARROW	S1-1; M6-2	W	VIII	VIII	3; 1.75	3; 1.25	11.2	2	SQ. TUBING	11	15.1
N17	CALLAWAY	40+57	24.0 L	CROSS WALK; ARROW	S1-1; M6-2	E	VIII	VIII	3; 1.75	3; 1.25	11.2	2	SQ. TUBING	11	15.1
N18	CALLAWAY	42+15	23.0 L	TYPE 3 OBJECT MARKER (LEFT)	OM3-L	W	VIII	VIII	1	3	3	1	SQ. TUBING	3**	5.8
N19	CALLAWAY	42+20	27.5 R	TYPE 3 OBJECT MARKER (RIGHT)	OM3-R	W	VIII	VIII	1	3	3	1	SQ. TUBING	3**	5.8
N20	CALLAWAY	42+32	23.0 L	TYPE 3 OBJECT MARKER (RIGHT)	OM3-R	E	VIII	VIII	1	3	3	1	SQ. TUBING	3**	5.8
N21	CALLAWAY	42+38	27.5 R	TYPE 3 OBJECT MARKER (LEFT)	OM3-L	E	VIII	VIII	1	3	3	1	SQ. TUBING	3**	5.8
N22	CALLAWAY	43+32	24.0 L	SCHOOL; SPEED LIMIT 15 WHEN FLASHING	S5-1	E	VIII	VIII	2	3	6	1	SQ. TUBING	8	10.8
N23	CALLAWAY	44+25	29.0 R	STOP WITH (2) STREET NAME	R1-1; CUSTOM	S	VIII	VIII	2.5; 2.5	2.5; 0.67	9.3	1	SQ. TUBING	7	10.7
N24	CALLAWAY	50+97	31.3 L	SPEED LIMIT 35	R2-1	E	VIII	VIII	2	3	6	1	SQ. TUBING	8	10.8
N25	CALLAWAY	53+08	24.0 L	DEER X-ING	W11-3	E	VIII	VIII	2.5	2.5	6.25	1	SQ. TUBING	7	9.3
N26	CALLAWAY	53+82	28.0 R	STOP WITH (2) STREET NAME	R1-1; CUSTOM	W	VIII	VIII	2.5; 2.5	2.5; 0.67	9.3	1	SQ. TUBING	7	10.7
SUBTOTAL											198.05	30			275.5
USE											200	30			275

* All street name signs were assumed to be 30"X8" in size

** Actual height may vary. To be determined in field based on ground elevation and surrounding objects.

MOLZENCORBIN
1155 Commerce Dr., Suite F
Las Cruces, New Mexico 88011
575 522 0049 office
575 522 7884 fax
MolzenCorbin.com

WYATT D. KARTCHNER
NEW MEXICO
20843
2/23/16
REGISTERED PROFESSIONAL ENGINEER

REV NO	REV DATE	DESCRIPTION
1	2/23/16	ROAD AND DRAIN REVISIONS

PROJECT NUMBER: CRS133-12
DESIGNED BY: WDK
DRAWN BY: EG
CHECKED BY: JTM
PROJ ENGINEER: WDK
PROJECT DATE: OCTOBER 2015

CALLAWAY DRIVE
SIGNING AND STRIPING
QUANTITIES

CALLAWAY DRIVE
CITY OF CARLSBAD
CARLSBAD, NEW MEXICO

C-118
SHEET

I:\CARLSBAD\CRS133-12-Callaway Design\DWG\CCA133-117-120.dwg

© COPYRIGHT

REMOVE AND RESET SIGN SCHEDULE								
INSTALL NO.	OLD ALG	OLD STATION	OLD OFFSET	NEW ALG	NEW STATION	NEW OFFSET	DESCRIPTION	DOMINANT DIRECTION PANEL FACES
RR1	CALLAWAY	35+25	26.2 R	CALLAWAY	35+25	28.3 R	DIGITAL SPEED	W

MOLZENCORBIN
1155 Commerce Dr., Suite F
Las Cruces, New Mexico 88011
575 522 0049 office
575 522 7884 fax
MolzenCorbin.com

WYATT D. KARTCHNER
NEW MEXICO
20843
10/15/15
REGISTERED PROFESSIONAL ENGINEER

REV NO	REV DATE	DESCRIPTION

PROJECT NUMBER: CRS133-12
DESIGNED BY: WDK
DRAWN BY: EG
CHECKED BY: JTM
PROJ ENGINEER: WDK
PROJECT DATE: OCTOBER 2015

CALLAWAY DRIVE
SIGNING AND STRIPING
QUANTITIES

CALLAWAY DRIVE
CITY OF CARLSBAD
CARLSBAD, NEW MEXICO

C-119
SHEET

© COPYRIGHT

EXISTING SIGN REMOVALS					
INSTALL NO.	ALG	STATION	OFFSET	DESCRIPTION	DOMINANT DIRECTION PANEL FACES
R1	CALLAWAY	13+00	21.9 L	DO NOT PASS	E
R2	CALLAWAY	13+29	32.9 L	STOP SIGN	N
R3	CALLAWAY	13+72	30.4 L	(2) STREET NAME SIGN	N
R4	CALLAWAY	14+66	24.0 R	(2) STREET NAME SIGN	N
R5	CALLAWAY	16+18	19.5 L	SPEED LIMIT 35	E
R6	CALLAWAY	16+18	22.5 R	SPEED LIMIT 25	W
R7	CALLAWAY	17+05	27.9 R	(2) STREET NAME SIGN	N
R8	CALLAWAY	19+47	31.3 R	(2) STREET NAME SIGN	S
R9	CALLAWAY	20+95	29.9 R	(2) STREET NAME SIGN	S
R10	CALLAWAY	25+28	24.9 L	STOP SIGN	N
R11	CALLAWAY	25+74	24.7 L	(2) STREET NAME SIGN	N
R12	CALLAWAY	31+35	28.2 R	(2) STREET NAME SIGN	N
R13	CALLAWAY	36+35	27.2 R	SCHOOL; SPEED LIMIT 15 WHEN FLASHING	W
R14	CALLAWAY	37+47	18.3 L	SPEED LIMIT 25	E
R15	CALLAWAY	39+80	39.8 R	(2) STREET NAME SIGN	N
R16	CALLAWAY	40+24	39.9 R	STOP SIGN	S
R17	CALLAWAY	40+40	27.9 R	CROSS WALK; ARROW	W
R18	CALLAWAY	40+57	23.5 L	CROSS WALK; ARROW	E
R19	CALLAWAY	42+14	11.8 L	OBJECT MARKER (LEFT)	W
R20	CALLAWAY	42+17	19.6 R	OBJECT MARKER (RIGHT)	W
R21	CALLAWAY	42++36	12.7 L	OBJECT MARKER (RIGHT)	E
R22	CALLAWAY	42+38	17.5 R	OBJECT MARKER (LEFT)	E
R23	CALLAWAY	43+32	21.3 L	SCHOOL; SPEED LIMIT 15 WHEN FLASHING	E
R24	CALLAWAY	45+88	18.0 L	CROSS WALK AHEAD	E
R25	CALLAWAY	46+61	27.1 R	DEER X-ING	W
R26	CALLAWAY	50+97	31.3 L	SPEED LIMIT 30	E
R27	CALLAWAY	53+08	19.3 L	DEER X-ING	E
R28	CALLAWAY	53+51	26.1 L	(2) STREET NAME SIGN	N
R29	CALLAWAY	53+81	26.4 R	STOP SIGN	W

STRIPING SCHEDULE							
					RETROREFLECTORIZED PLASTIC PAVEMENT STRIPE		
					ITEM 704000 - 4"		ITEM 704212 - 12"
ALG	STATION	TO	STATION	LOCATION	SOLID WHITE	SOLID YELLOW	SOLID WHITE
CALLAWAY DRIVE	10+00	-	54+00	CALLAWAY DRIVE	8150	8600	365
SUBTOTAL					8150	8600	365
PROJECT USE					16750		365

MOLZENCORBIN
1155 Commerce Dr., Suite F
Las Cruces, New Mexico 88011
575 522 0049 office
575 522 7884 fax
MolzenCorbin.com

WYATT D. KARTCHNER
NEW MEXICO
20843
REGISTERED PROFESSIONAL ENGINEER
2/23/16

REV NO	REV DATE	DESCRIPTION
1	2/23/16	ROAD AND DRAIN REVISIONS

PROJECT NUMBER: CRS133-12
DESIGNED BY: WDK
DRAWN BY: EG
CHECKED BY: JTM
PROJ ENGINEER: WDK
PROJECT DATE: OCTOBER 2015

CALLAWAY DRIVE
SIGNING AND STRIPING
QUANTITIES

CALLAWAY DRIVE
CITY OF CARLSBAD
CARLSBAD, NEW MEXICO

C-120
SHEET

I:\CARLSBAD\CRS133-12-Callaway Design\DWG\CCA133-117-120.dwg

© COPYRIGHT

1913 CALLAWAY

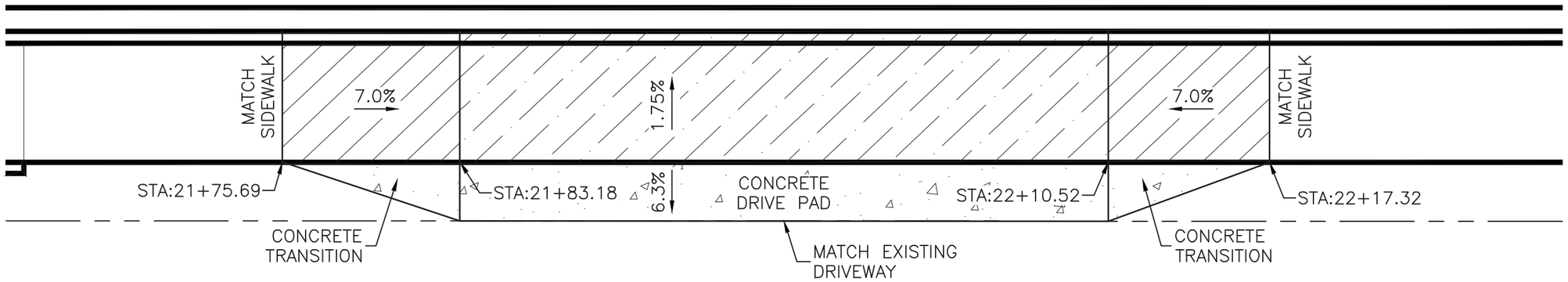

1911 CALLAWAY

1909 CALLAWAY

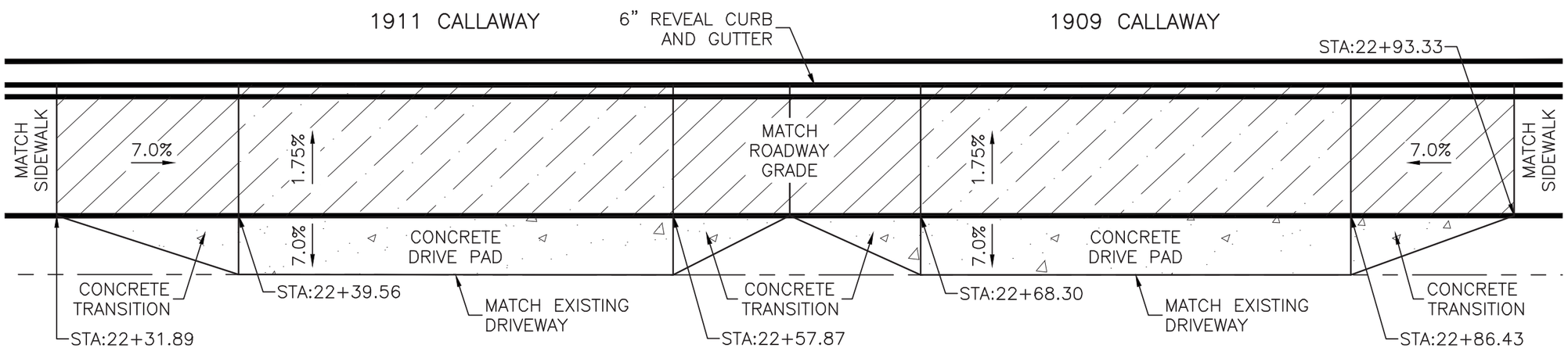

1907 CALLAWAY

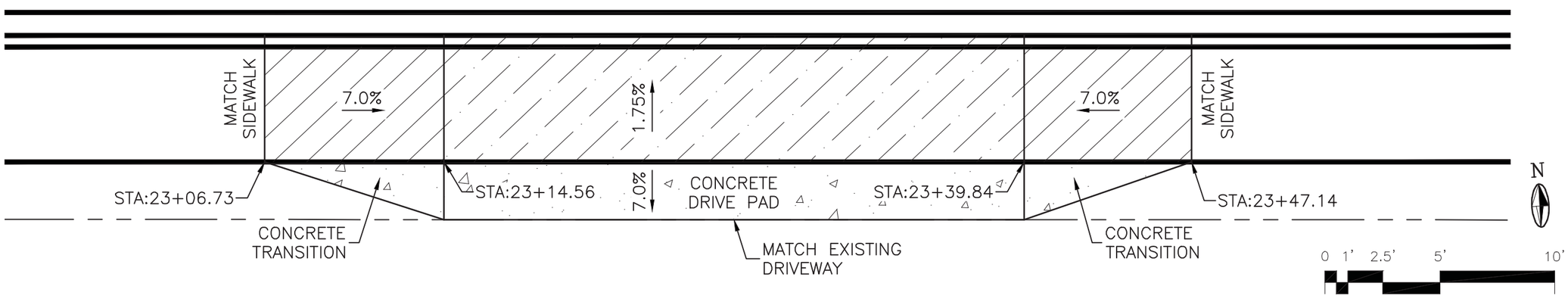

MOLZENCORBIN
1155 Commerce Dr., Suite F
Las Cruces, New Mexico 88011
575 522 0049 office
575 522 7884 fax
MolzenCorbin.com

WYATT D. KARTCHNER
NEW MEXICO
20843
10/15/15
REGISTERED PROFESSIONAL ENGINEER

REV NO	REV DATE	DESCRIPTION

PROJECT NUMBER:	CRS133-12
DESIGNED BY:	WDK
DRAWN BY:	EG
CHECKED BY:	JTM
PROJ ENGINEER:	WDK
PROJECT DATE:	OCTOBER 2015

DRIVEWAY PLANS

CALLAWAY DRIVE
CITY OF CARLSBAD
CARLSBAD, NEW MEXICO

C-121
SHEET

© COPYRIGHT

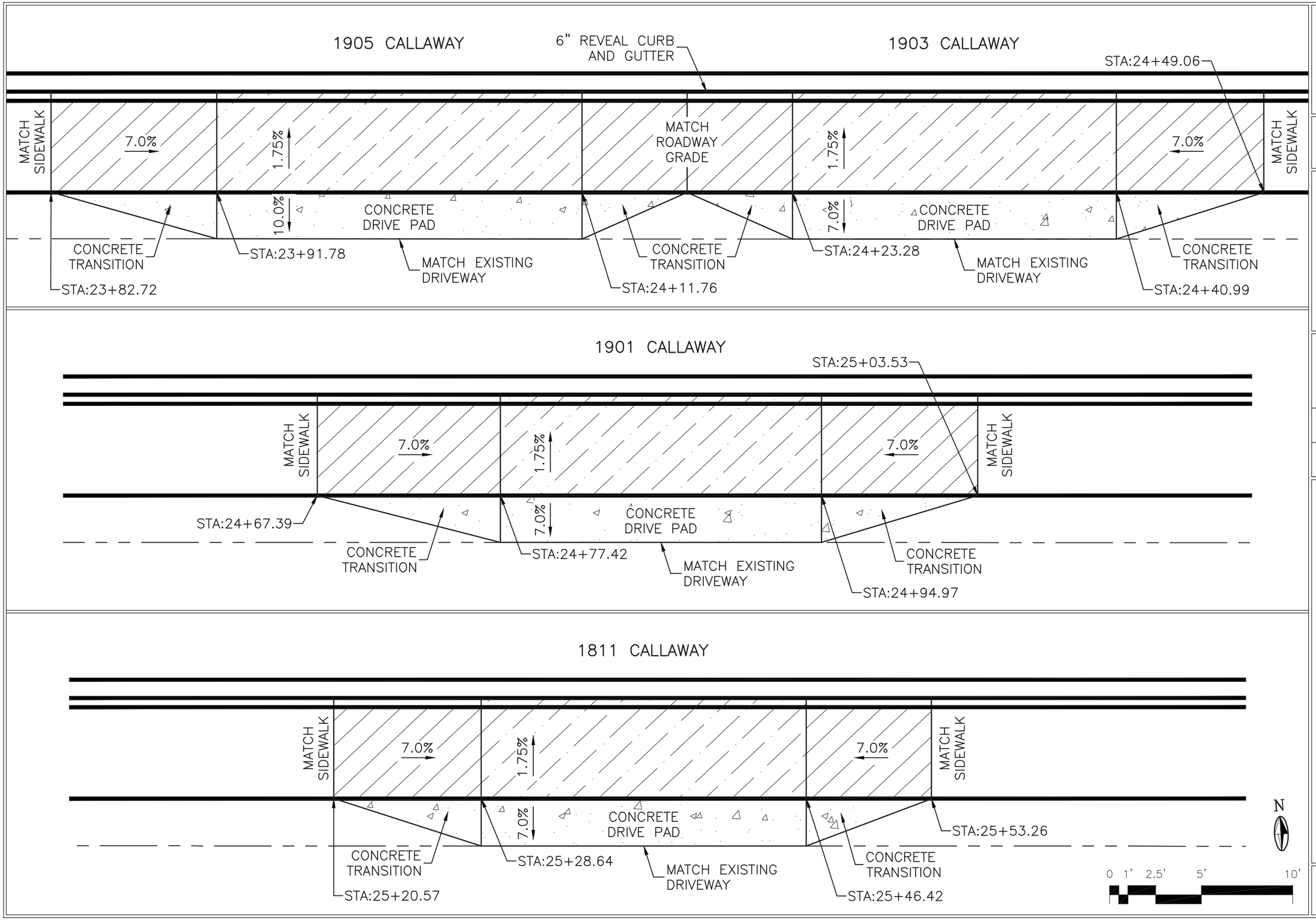

MOLZENCORBIN
1155 Commerce Dr., Suite F
Las Cruces, New Mexico 88011
575 522 0049 office
575 522 7884 fax
MolzenCorbin.com

WYATT D. KARTCHNER
NEW MEXICO
20843
10/15/15
REGISTERED PROFESSIONAL ENGINEER

REV NO	REV DATE	DESCRIPTION

PROJECT NUMBER:	CRS133-12
DESIGNED BY:	WDK
DRAWN BY:	EG
CHECKED BY:	JTM
PROJ ENGINEER:	WDK
PROJECT DATE:	OCTOBER 2015

DRIVEWAY PLANS

CALLAWAY DRIVE
CITY OF CARLSBAD
CARLSBAD, NEW MEXICO

C-122
SHEET

© COPYRIGHT

1809 CALLAWAY

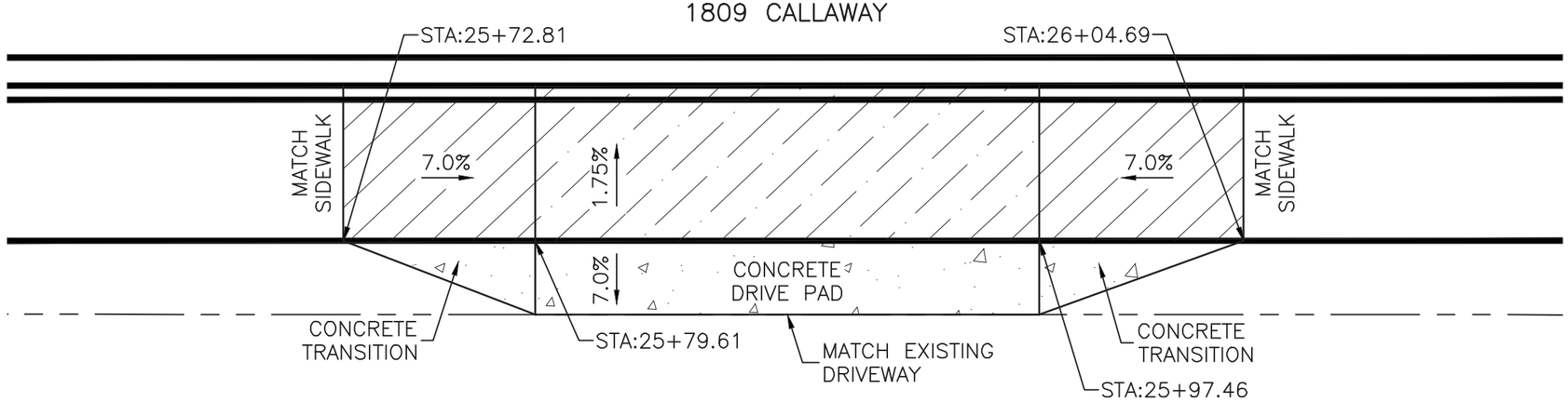

1807 CALLAWAY

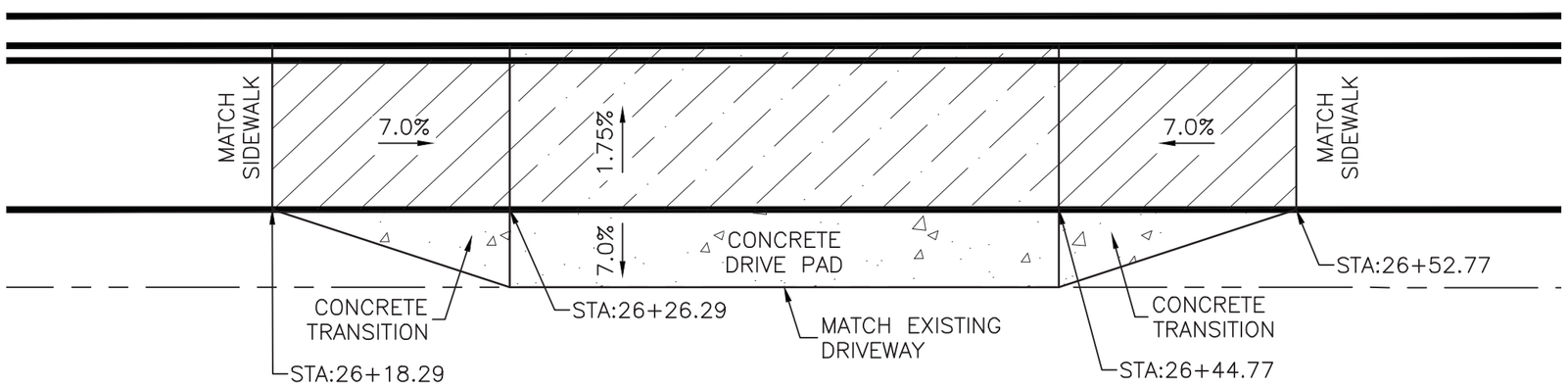

1805 CALLAWAY

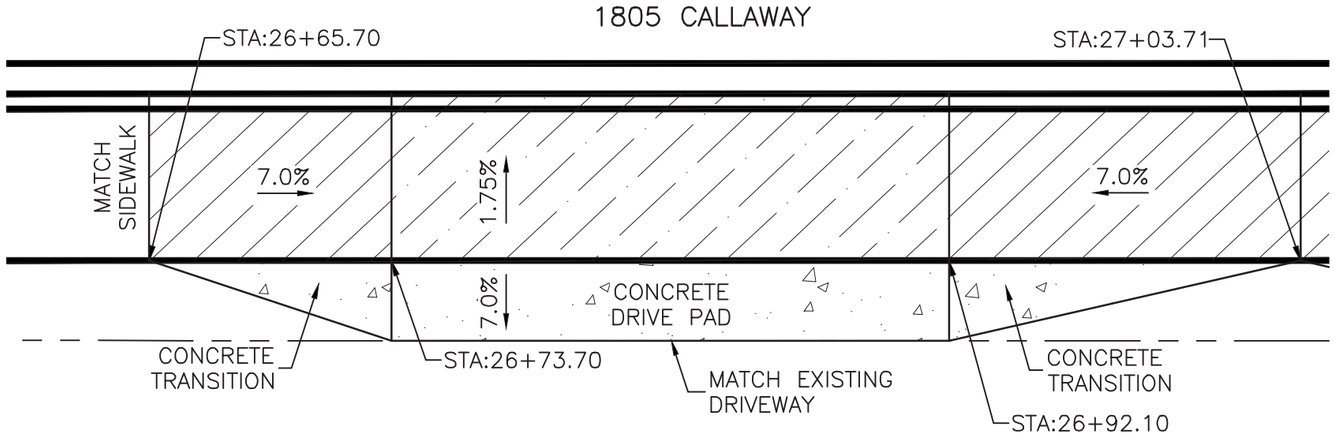

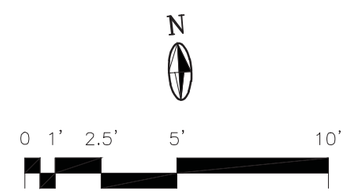

MOLZENCORBIN
1155 Commerce Dr., Suite F
Las Cruces, New Mexico 88011
575 522 0049 office
575 522 7884 fax
MolzenCorbin.com

WYATT D. KARTCHNER
NEW MEXICO
20843
10/15/15
REGISTERED PROFESSIONAL ENGINEER

REV NO	REV DATE	DESCRIPTION

PROJECT NUMBER:	CRS133-12
DESIGNED BY:	WDK
DRAWN BY:	EG
CHECKED BY:	JTM
PROJ ENGINEER:	WDK
PROJECT DATE:	OCTOBER 2015

DRIVEWAY PLANS

CALLAWAY DRIVE
CITY OF CARLSBAD
CARLSBAD, NEW MEXICO

SHEET C-123

© COPYRIGHT

1803 CALLAWAY

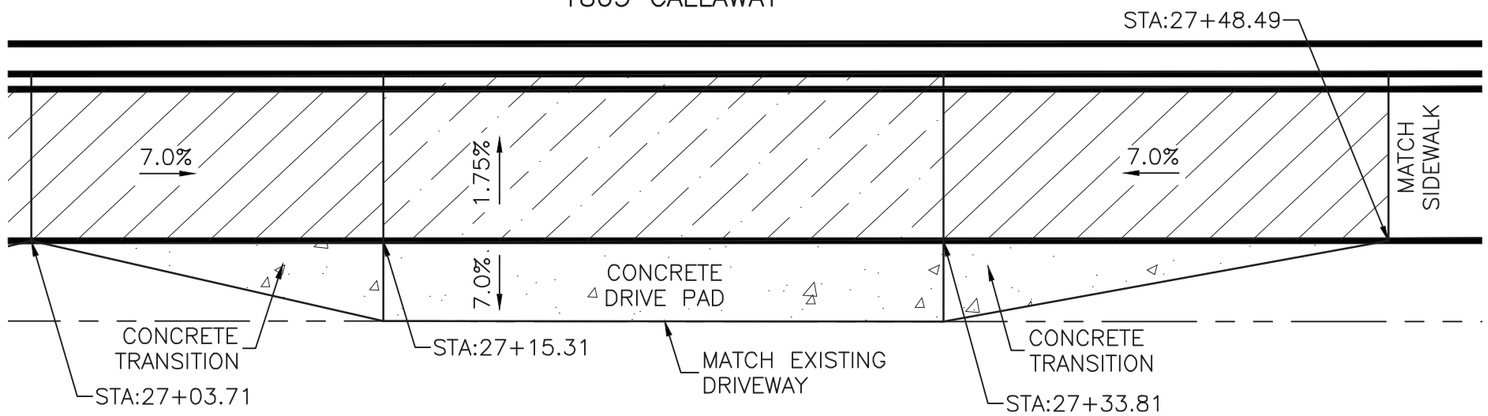

1801 CALLAWAY

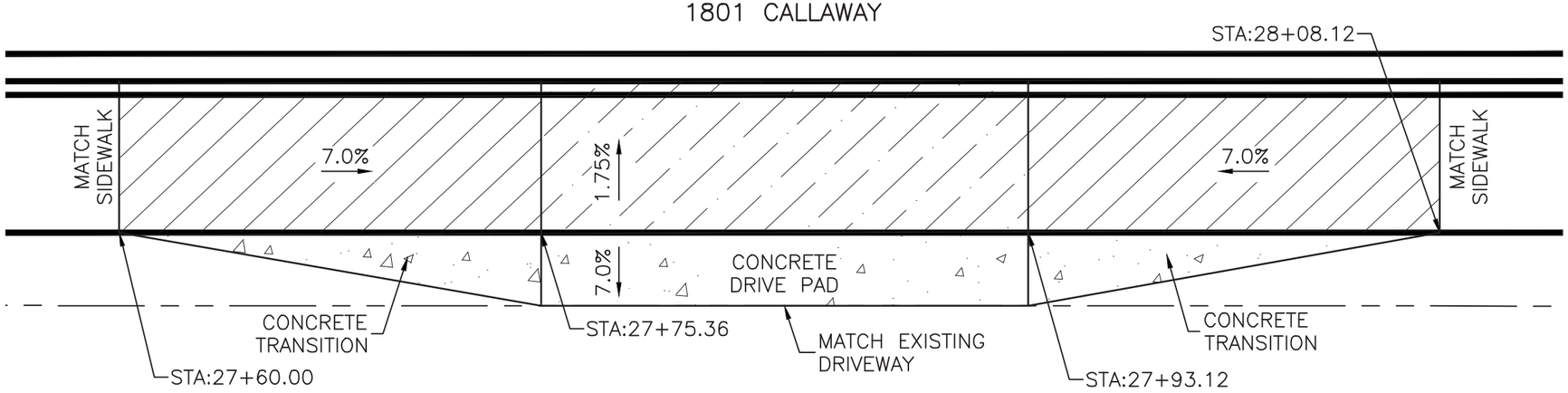

1711 CALLAWAY

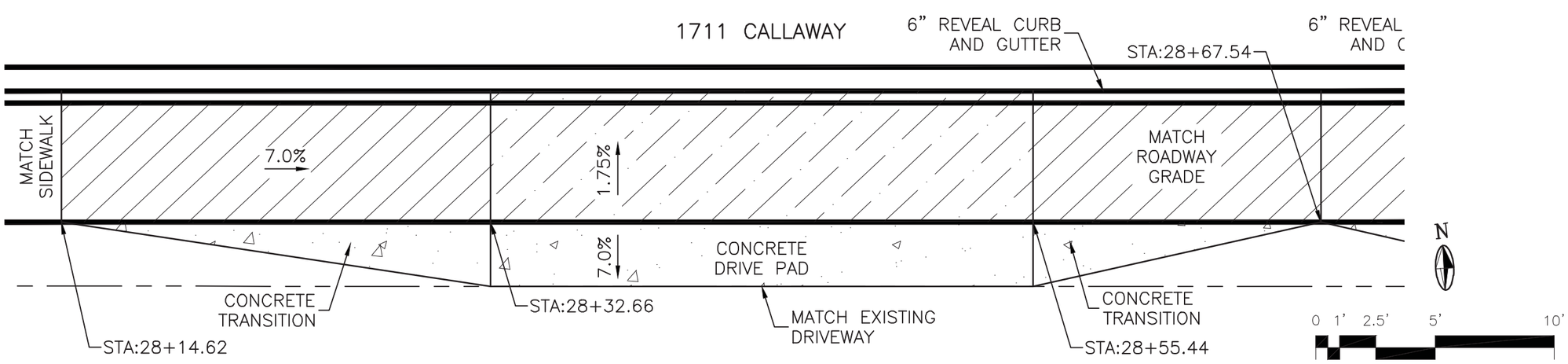

MOLZENCORBIN
1155 Commerce Dr., Suite F
Las Cruces, New Mexico 88011
575 522 0049 office
575 522 7884 fax
MolzenCorbin.com

WYATT D. KARTCHNER
NEW MEXICO
20843
REGISTERED PROFESSIONAL ENGINEER
10/15/15

REV NO	REV DATE	DESCRIPTION

PROJECT NUMBER:	CRS133-12
DESIGNED BY:	WDK
DRAWN BY:	EG
CHECKED BY:	JTM
PROJ ENGINEER:	WDK
PROJECT DATE:	OCTOBER 2015

DRIVEWAY PLANS

CALLAWAY DRIVE
CITY OF CARLSBAD
CARLSBAD, NEW MEXICO

SHEET C-124

© COPYRIGHT

1709 CALLAWAY

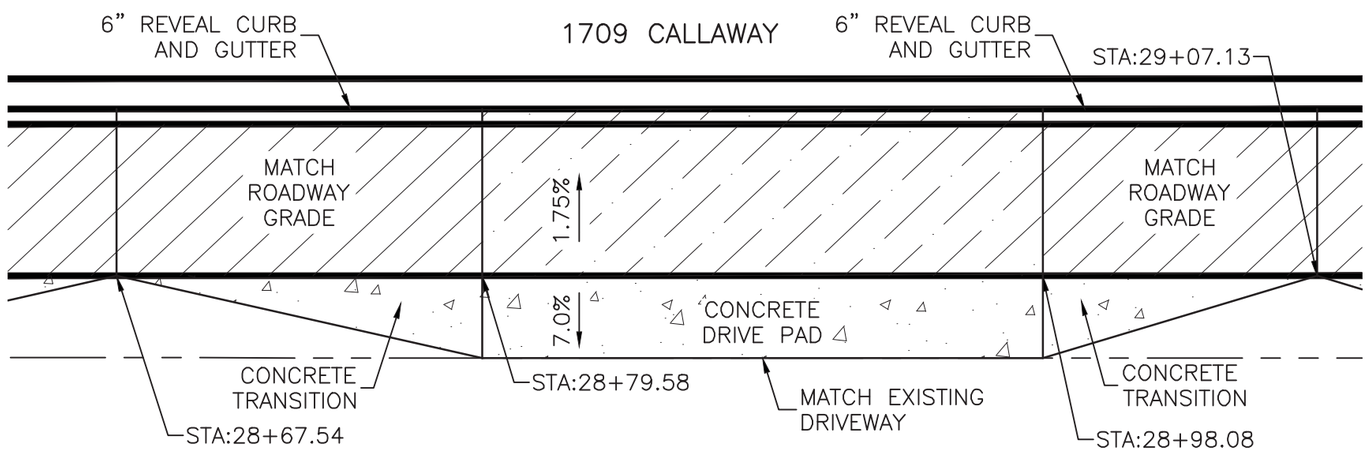

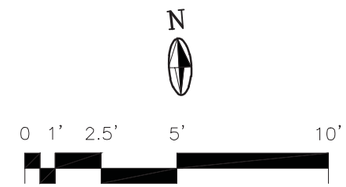

1707 CALLAWAY

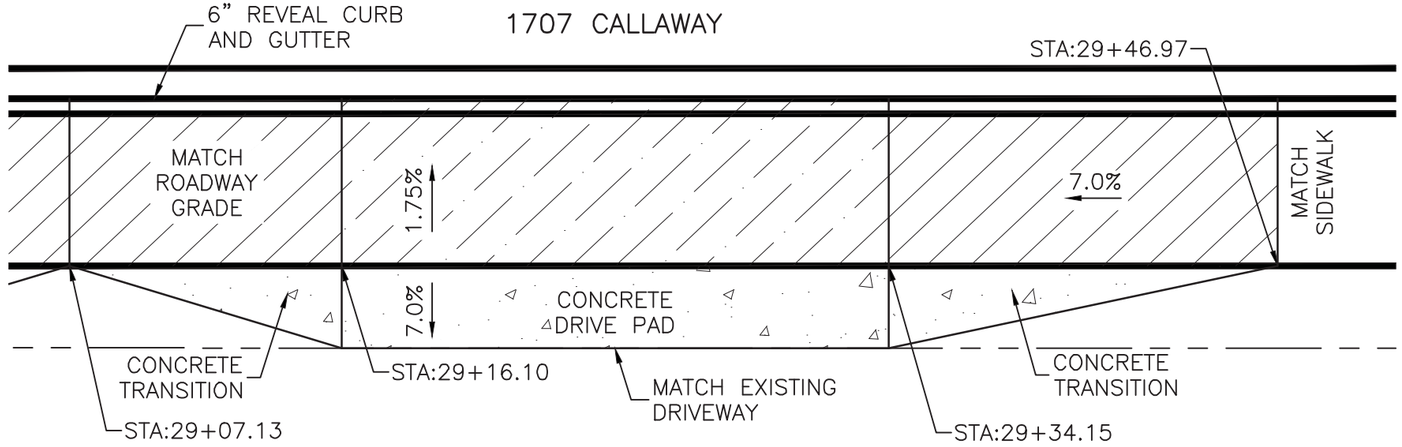

1705 CALLAWAY

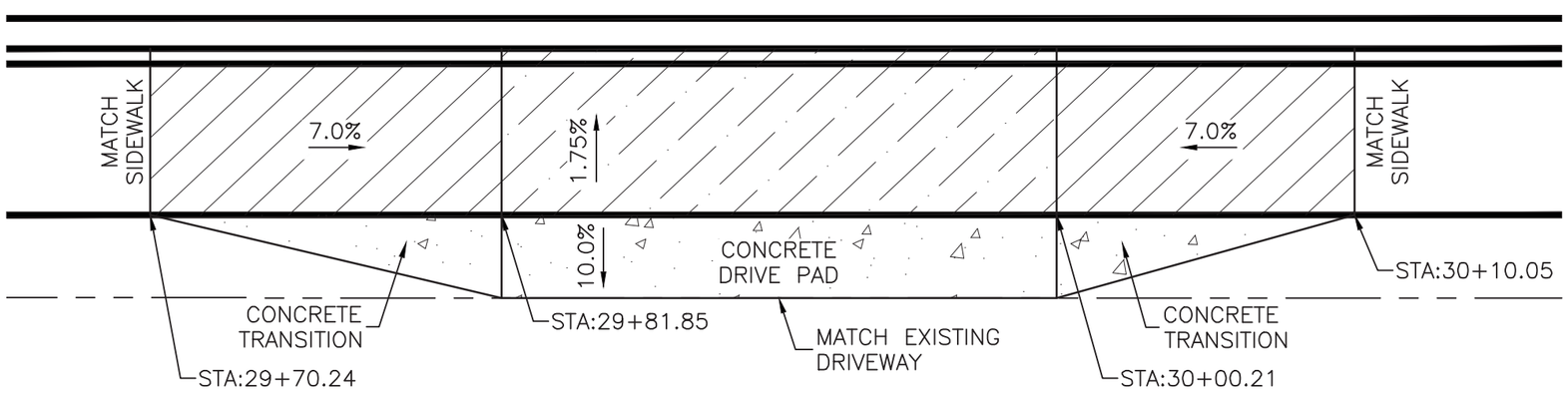

MOLZENCORBIN
1155 Commerce Dr., Suite F
Las Cruces, New Mexico 88011
575 522 0049 office
575 522 7884 fax
MolzenCorbin.com

WYATT D. KARTCHNER
NEW MEXICO
20843
10/15/15
REGISTERED PROFESSIONAL ENGINEER

REV NO	REV DATE	DESCRIPTION

PROJECT NUMBER:	CRS133-12
DESIGNED BY:	WDK
DRAWN BY:	EG
CHECKED BY:	JTM
PROJ ENGINEER:	WDK
PROJECT DATE:	OCTOBER 2015

DRIVEWAY PLANS

CALLAWAY DRIVE
CITY OF CARLSBAD
CARLSBAD, NEW MEXICO

C-125

SHEET

© COPYRIGHT

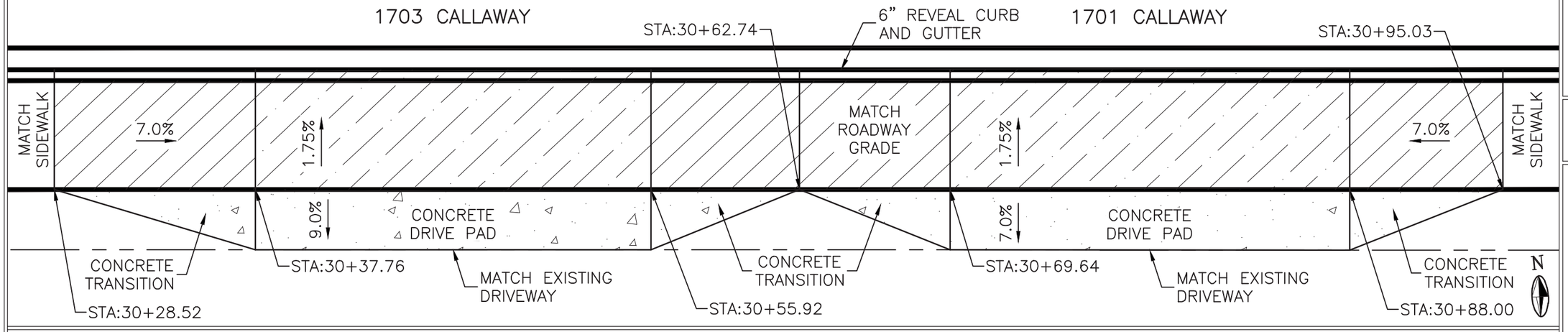

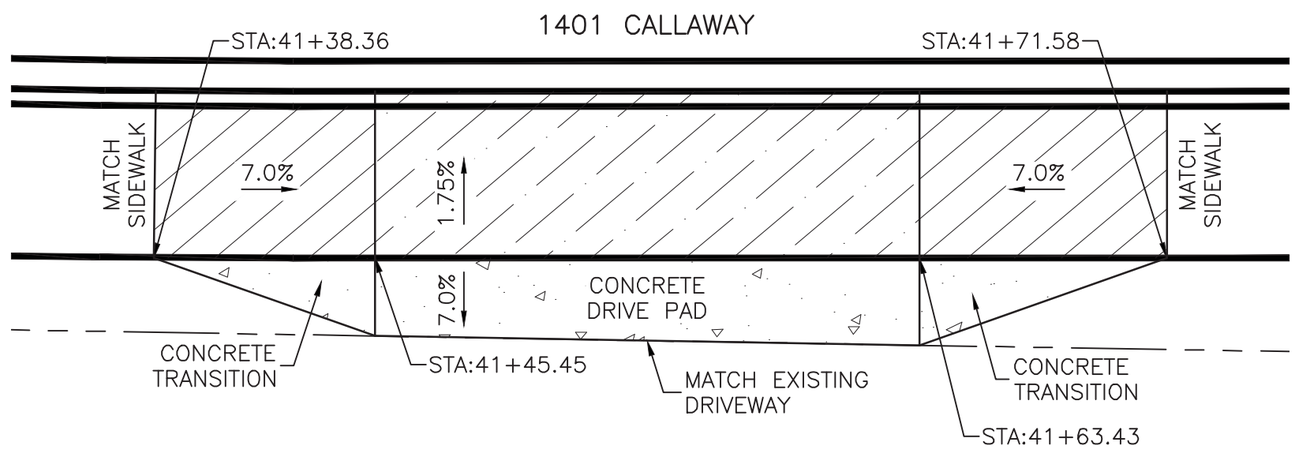

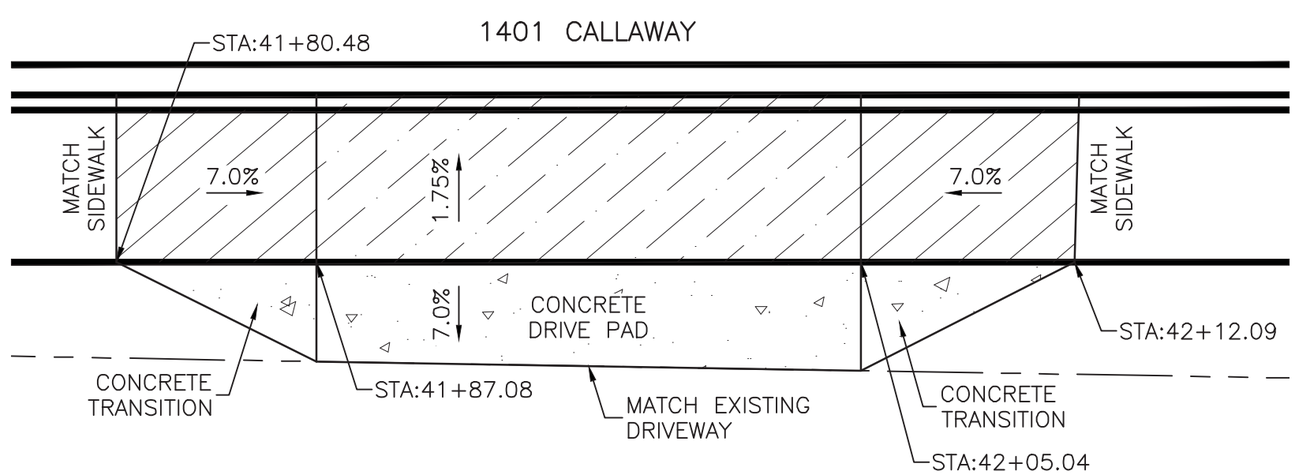

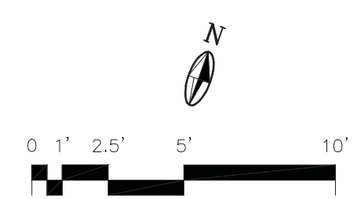

MOLZENCORBIN
1155 Commerce Dr., Suite F
Las Cruces, New Mexico 88011
575 522 0049 office
575 522 7884 fax
MolzenCorbin.com

WYATT D. KARTCHNER
NEW MEXICO
20843
10/15/15
REGISTERED PROFESSIONAL ENGINEER

REV NO	REV DATE	DESCRIPTION

PROJECT NUMBER:	CRS133-12
DESIGNED BY:	WDK
DRAWN BY:	EG
CHECKED BY:	JTM
PROJ ENGINEER:	WDK
PROJECT DATE:	OCTOBER 2015

DRIVEWAY PLANS

CALLAWAY DRIVE
CITY OF CARLSBAD
CARLSBAD, NEW MEXICO

C-126

SHEET

© COPYRIGHT

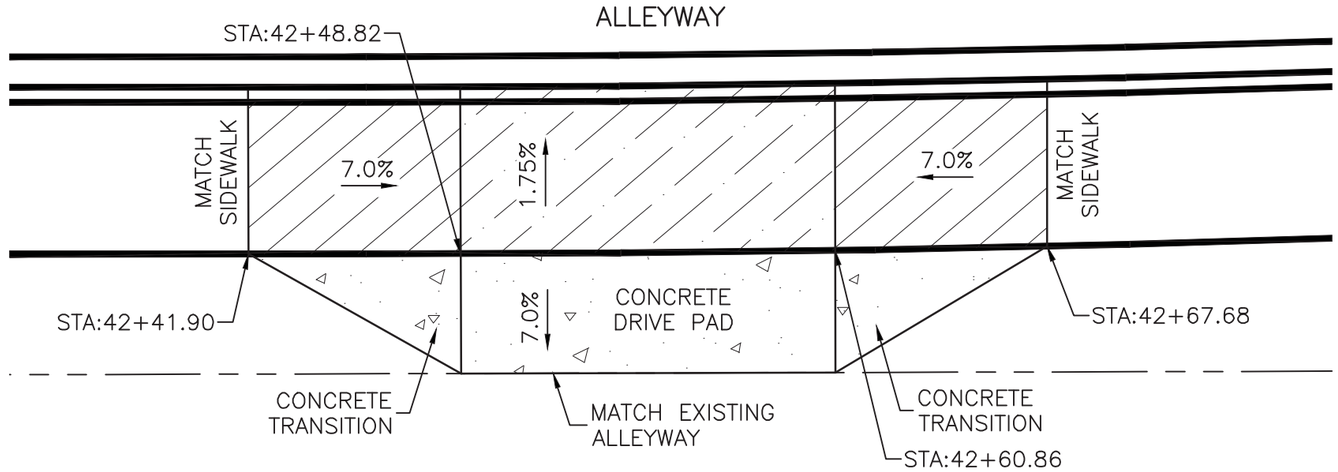

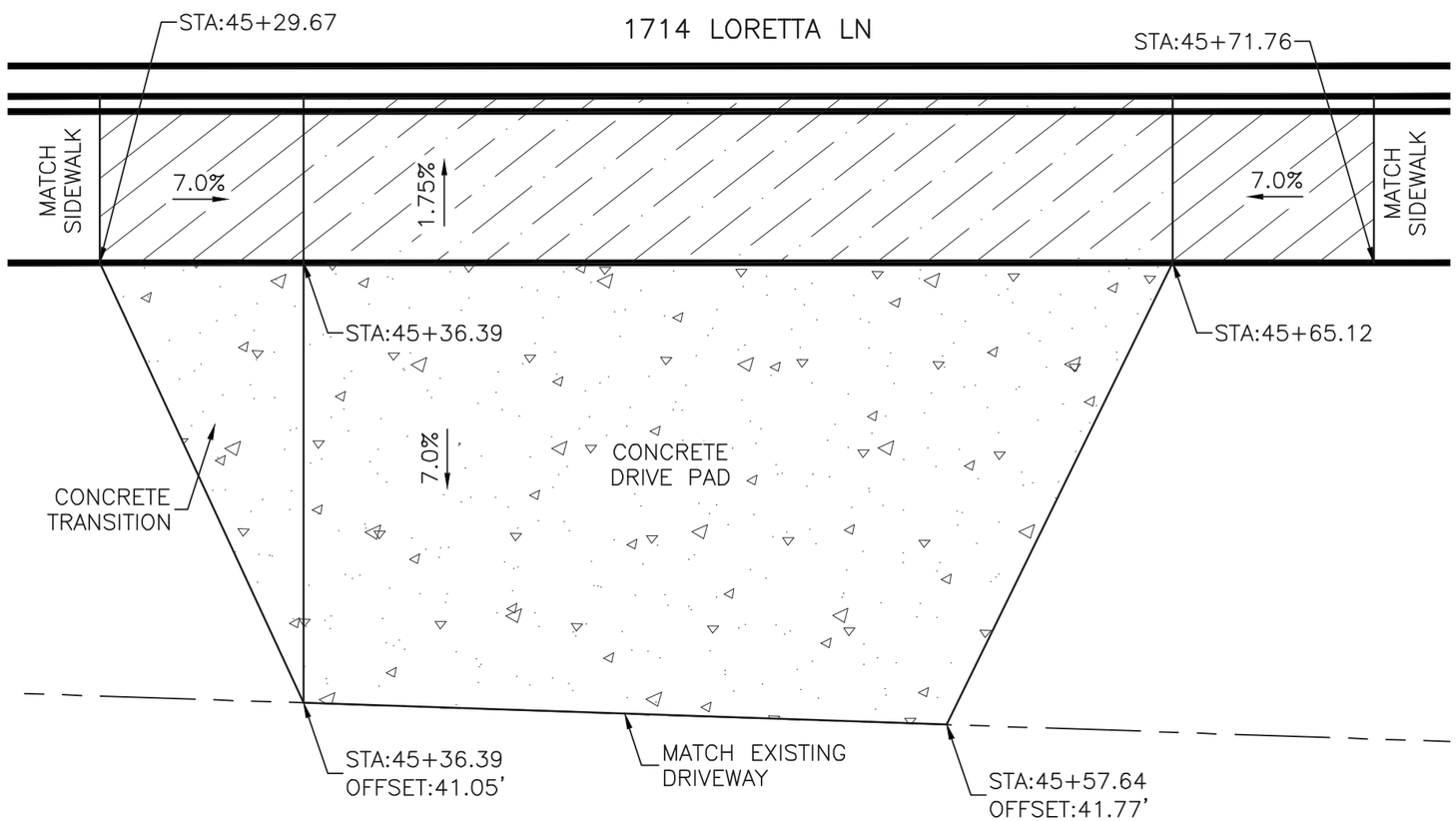

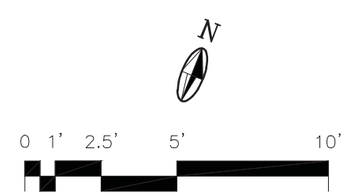

MOLZENCORBIN
1155 Commerce Dr., Suite F
Las Cruces, New Mexico 88011
575 522 0049 office
575 522 7884 fax
MolzenCorbin.com

WYATT D. KARTCHNER
NEW MEXICO
20843
10/15/15
REGISTERED PROFESSIONAL ENGINEER

REV NO	REV DATE	DESCRIPTION

PROJECT NUMBER: CRS133-12
DESIGNED BY: WDK
DRAWN BY: EG
CHECKED BY: JTM
PROJ ENGINEER: WDK
PROJECT DATE: OCTOBER 2015

DRIVEWAY PLANS

CALLAWAY DRIVE
CITY OF CARLSBAD
CARLSBAD, NEW MEXICO

SHEET C-127

© COPYRIGHT

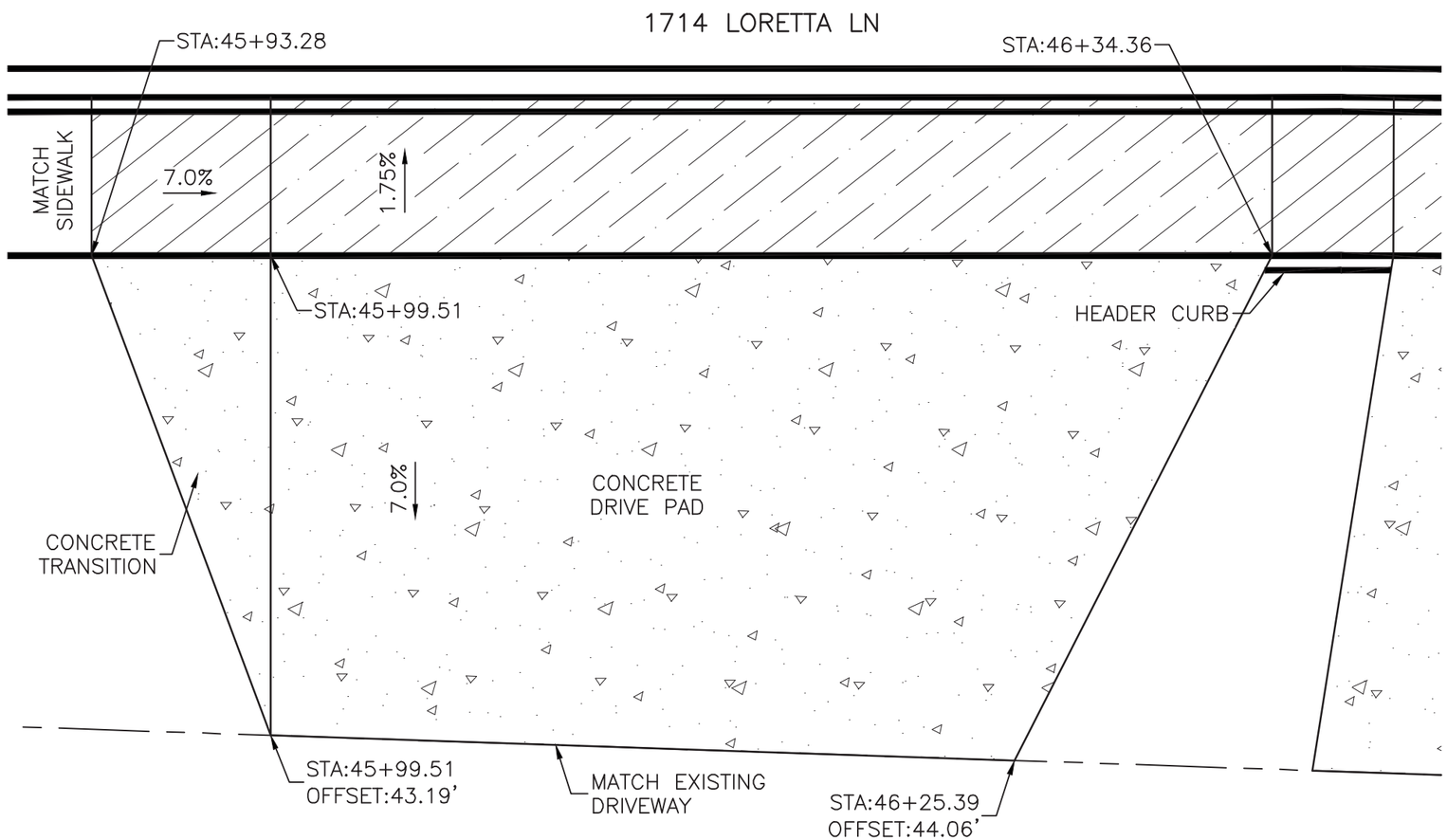

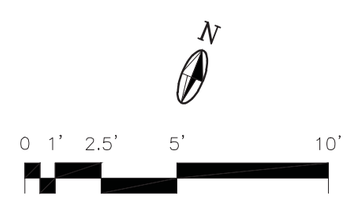

MOLZENCORBIN
1155 Commerce Dr., Suite F
Las Cruces, New Mexico 88011
575 522 0049 office
575 522 7884 fax
MolzenCorbin.com

WYATT D. KARTCHNER
NEW MEXICO
20843
10/15/15
REGISTERED PROFESSIONAL ENGINEER

REV NO	REV DATE	DESCRIPTION

PROJECT NUMBER: CRS133-12
DESIGNED BY: WDK
DRAWN BY: EG
CHECKED BY: JTM
PROJ ENGINEER: WDK
PROJECT DATE: OCTOBER 2015

DRIVEWAY PLANS

CALLAWAY DRIVE
CITY OF CARLSBAD
CARLSBAD, NEW MEXICO

C-128
SHEET

© COPYRIGHT

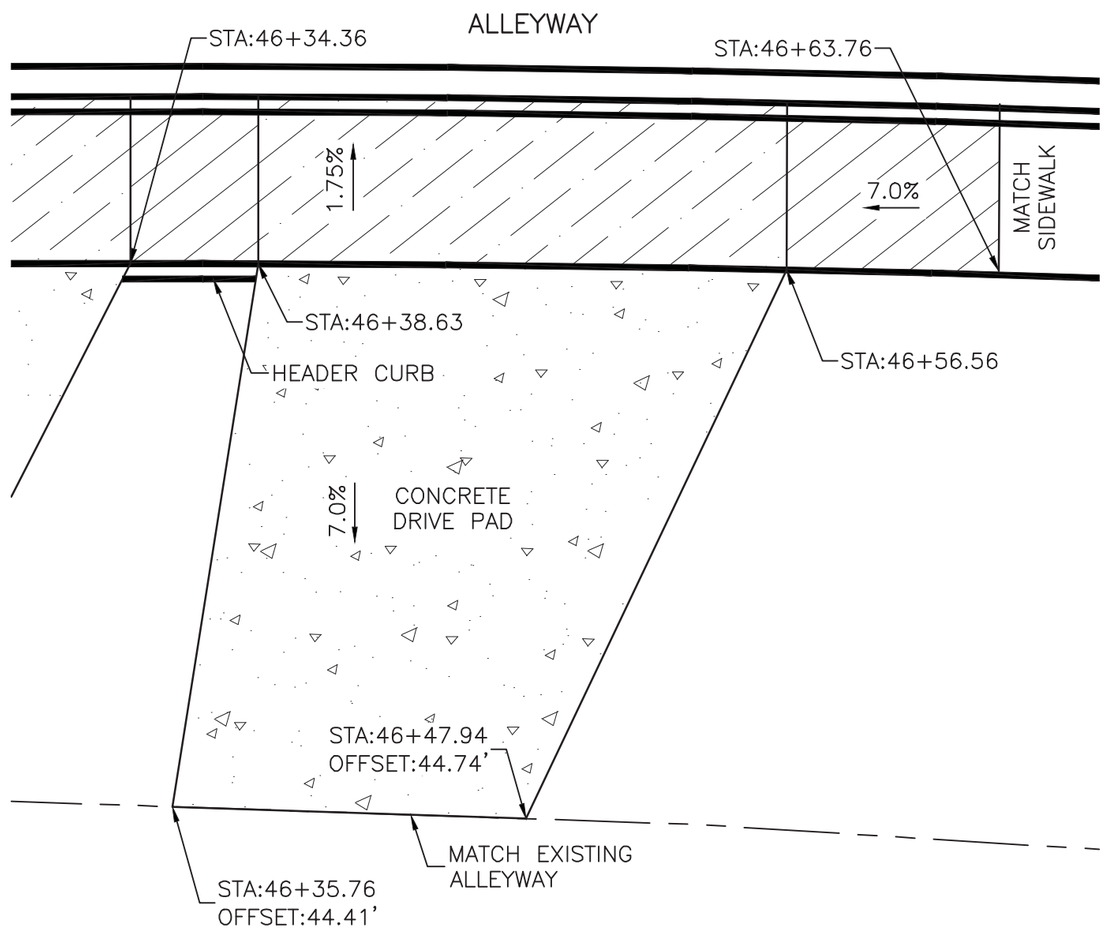

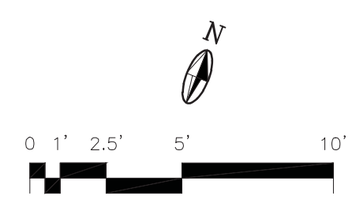

MOLZENCORBIN
1155 Commerce Dr., Suite F
Las Cruces, New Mexico 88011
575 522 0049 office
575 522 7884 fax
MolzenCorbin.com

WYATT D. KARTCHNER
NEW MEXICO
20843
10/15/15
REGISTERED PROFESSIONAL ENGINEER

REV NO	REV DATE	DESCRIPTION

PROJECT NUMBER: CRS133-12
DESIGNED BY: WDK
DRAWN BY: EG
CHECKED BY: JTM
PROJ ENGINEER: WDK
PROJECT DATE: OCTOBER 2015

DRIVEWAY PLANS

CALLAWAY DRIVE
CITY OF CARLSBAD
CARLSBAD, NEW MEXICO

C-129
SHEET

© COPYRIGHT

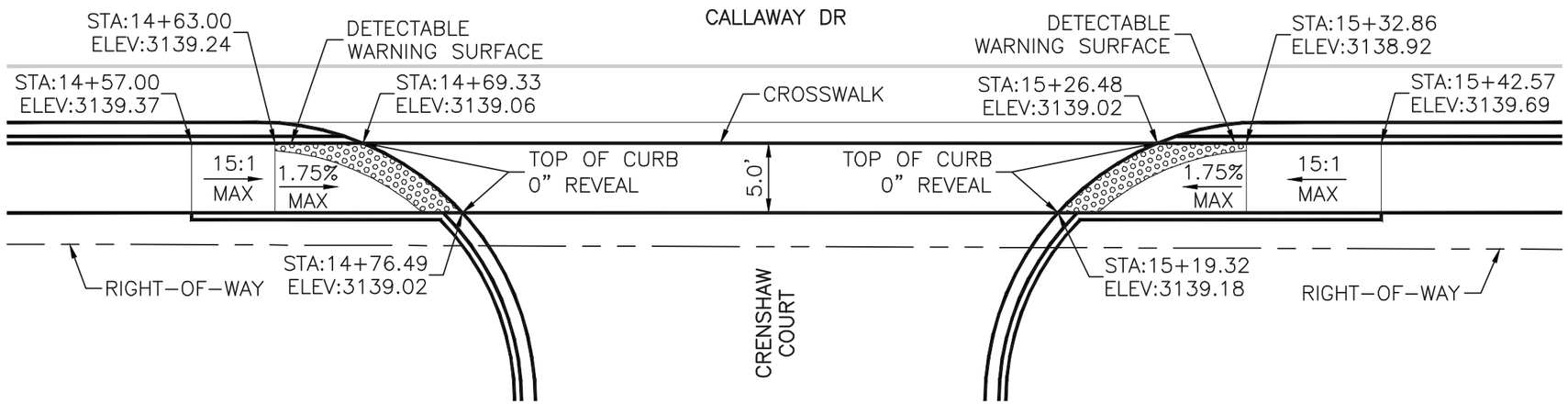

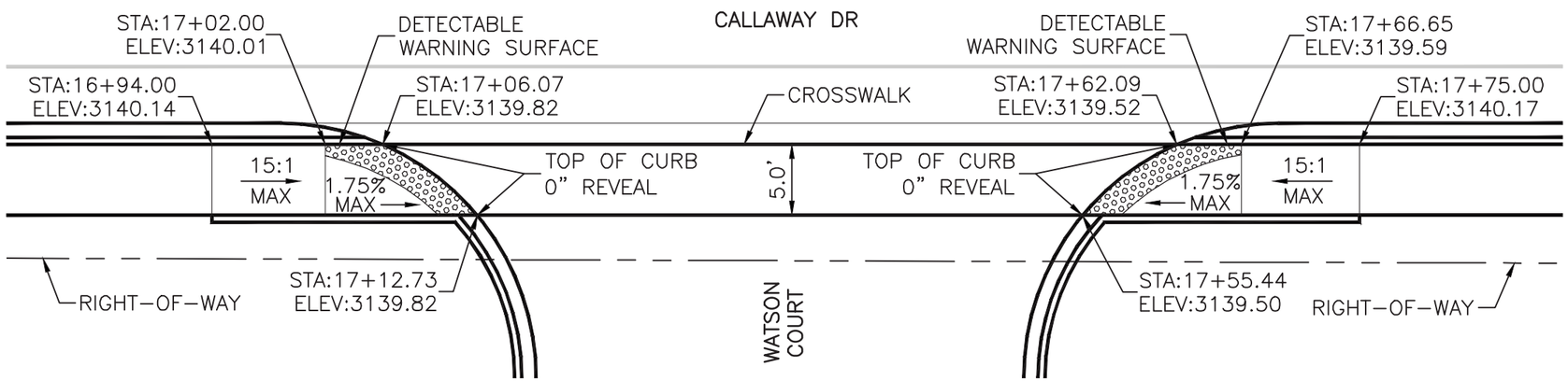

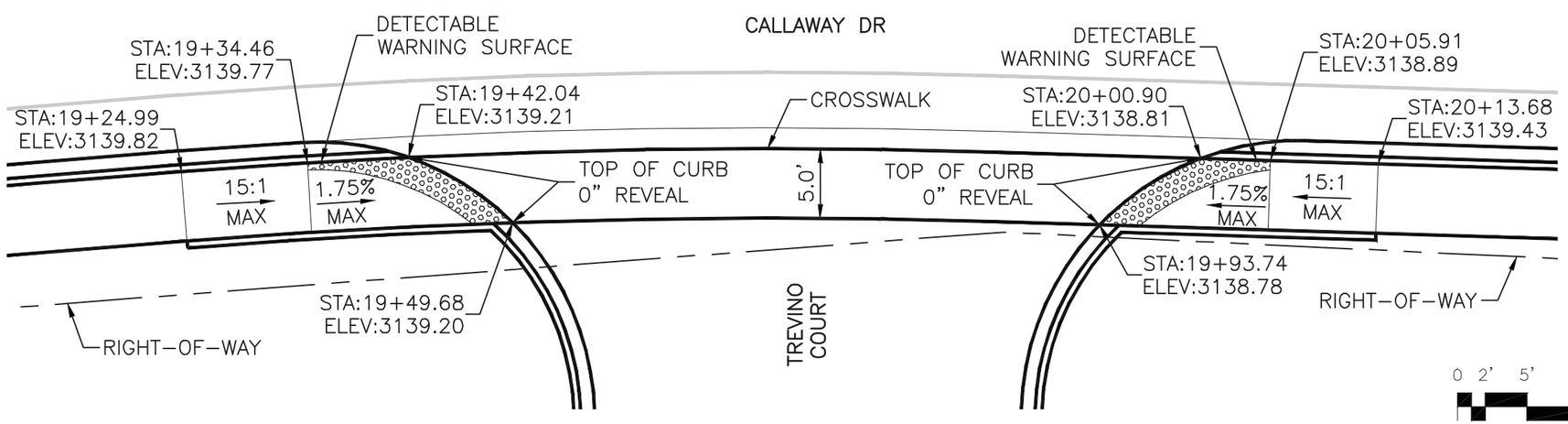

MOLZENCORBIN
1155 Commerce Dr., Suite F
Las Cruces, New Mexico 88011
575 522 0049 office
575 522 7884 fax
MolzenCorbin.com

WYATT D. KARTCHNER
NEW MEXICO
20843
REGISTERED PROFESSIONAL ENGINEER
2/23/16

REV NO	REV DATE	DESCRIPTION
1	2/23/16	ROAD AND DRAIN REVISIONS

PROJECT NUMBER: CRS133-12
DESIGNED BY: WDK
DRAWN BY: EG
CHECKED BY: JTM
PROJ ENGINEER: WDK
PROJECT DATE: OCTOBER 2015

ADA RAMP DETAILS

CALLAWAY DRIVE
CITY OF CARLSBAD
CARLSBAD, NEW MEXICO

C-130
SHEET

I:\CARLSBAD\CRS133-12-Callaway Design\DWG\CCA133-130-132.dwg

© COPYRIGHT

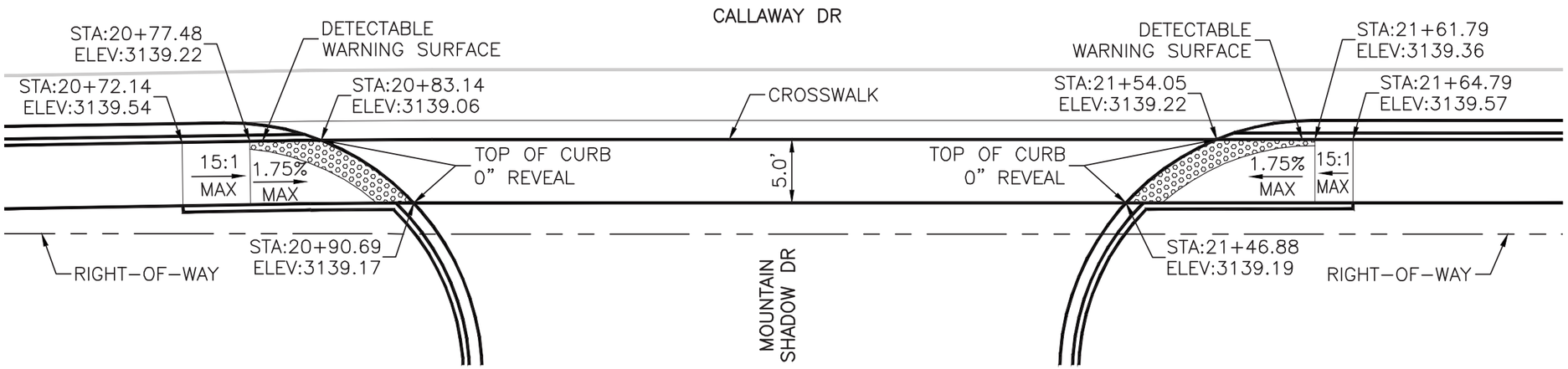

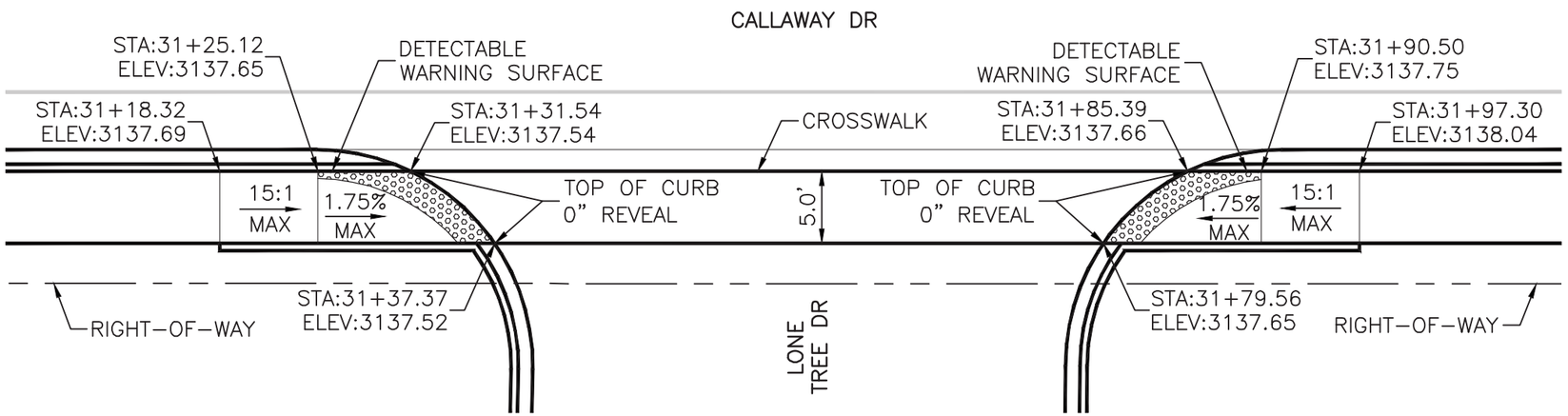

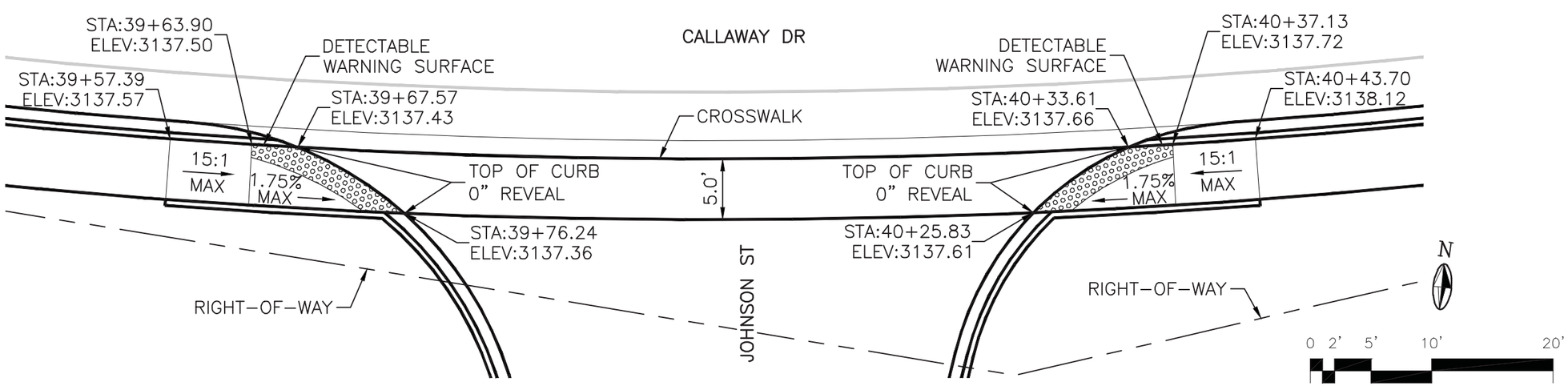

MOLZENCORBIN
1155 Commerce Dr., Suite F
Las Cruces, New Mexico 88011
575 522 0049 office
575 522 7884 fax
MolzenCorbin.com

WYATT D. KARTCHNER
NEW MEXICO
20843
10/15/15
REGISTERED PROFESSIONAL ENGINEER

REV NO	REV DATE	DESCRIPTION

PROJECT NUMBER: CRS133-12
DESIGNED BY: WDK
DRAWN BY: EG
CHECKED BY: JTM
PROJ ENGINEER: WDK
PROJECT DATE: OCTOBER 2015

ADA RAMP DETAILS

CALLAWAY DRIVE
CITY OF CARLSBAD
CARLSBAD, NEW MEXICO

SHEET C-131

© COPYRIGHT

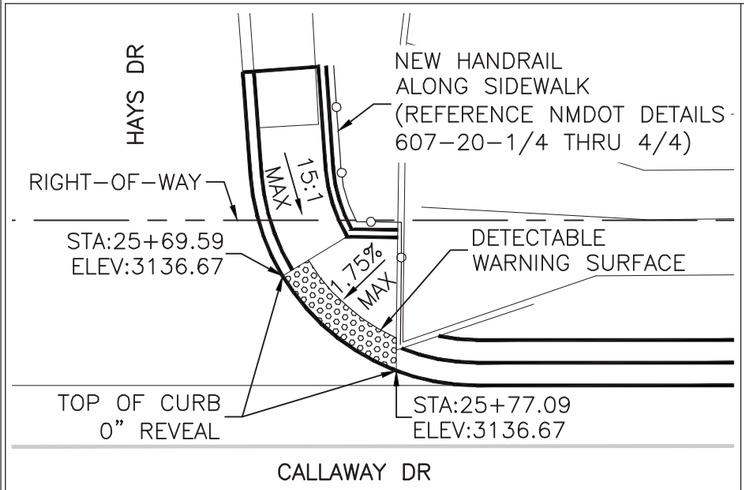

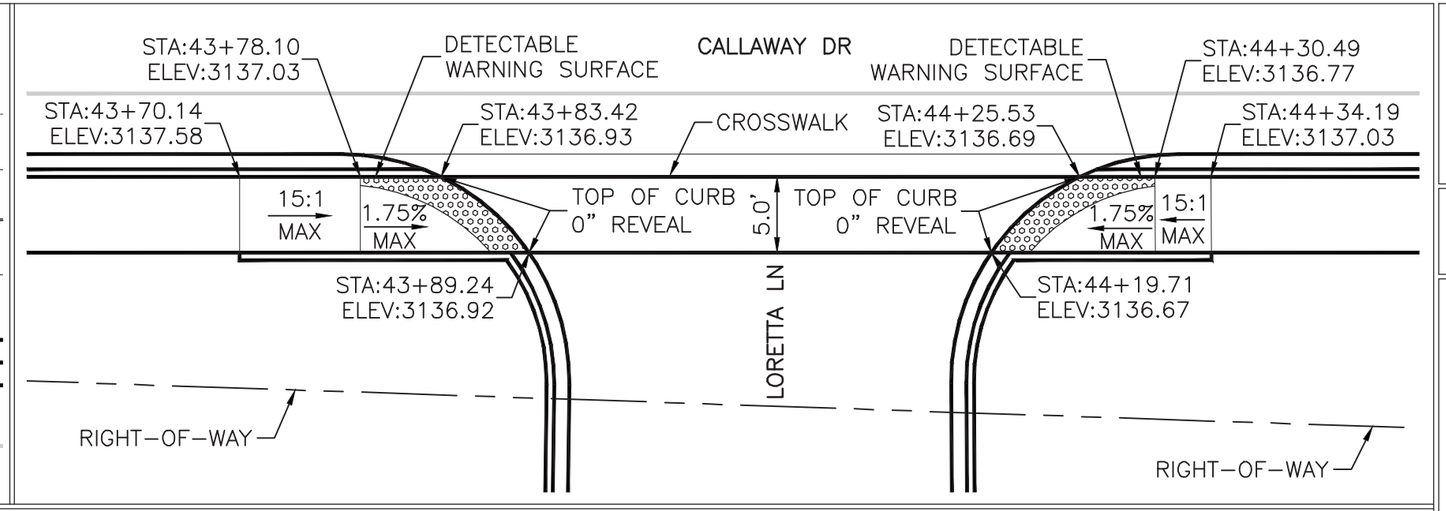

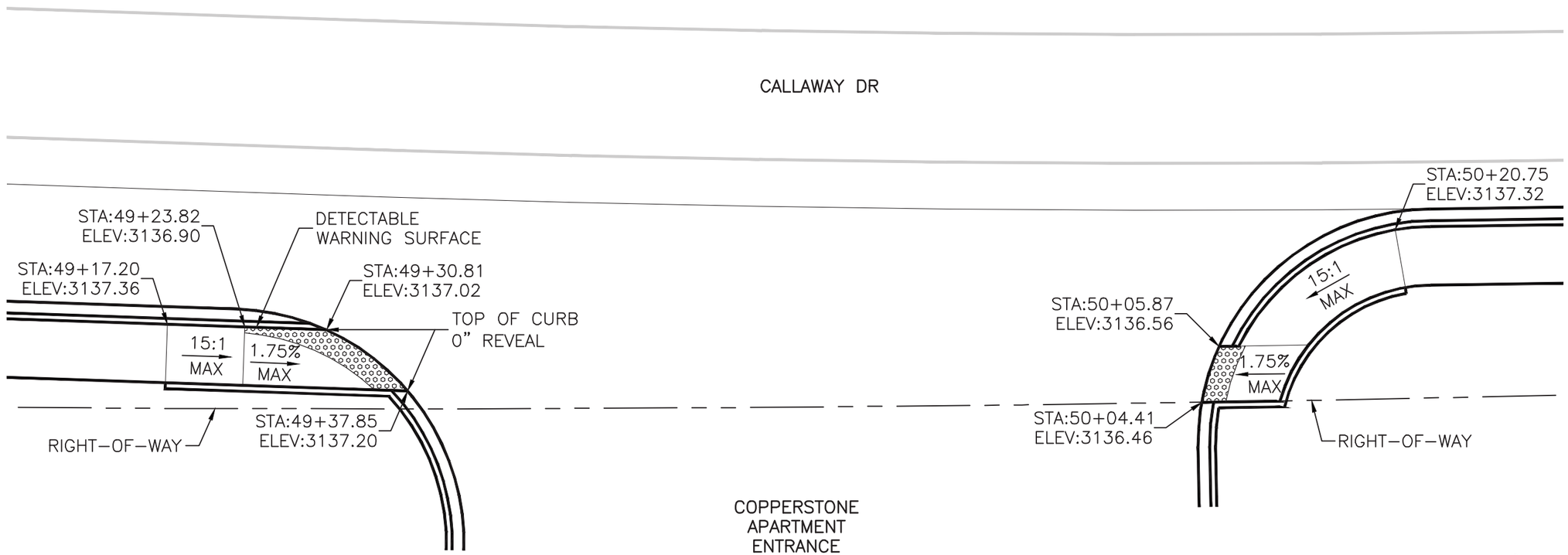

MOLZENCORBIN
1155 Commerce Dr., Suite F
Las Cruces, New Mexico 88011
575 522 0049 office
575 522 7884 fax
MolzenCorbin.com

WYATT D. KARTCHNER
NEW MEXICO
20843
10/15/15
REGISTERED PROFESSIONAL ENGINEER

REV NO	REV DATE	DESCRIPTION

PROJECT NUMBER:	CRS133-12
DESIGNED BY:	WDK
DRAWN BY:	EG
CHECKED BY:	JTM
PROJ ENGINEER:	WDK
PROJECT DATE:	OCTOBER 2015

ADA RAMP DETAILS

CALLAWAY DRIVE
CITY OF CARLSBAD
CARLSBAD, NEW MEXICO

SHEET C-132

© COPYRIGHT

TYPICAL SECTION A
STA. 13+00 TO STA. 21+60
N.T.S.

TYPICAL SECTION B
STA. 23+50 TO STA. 38+00
N.T.S.

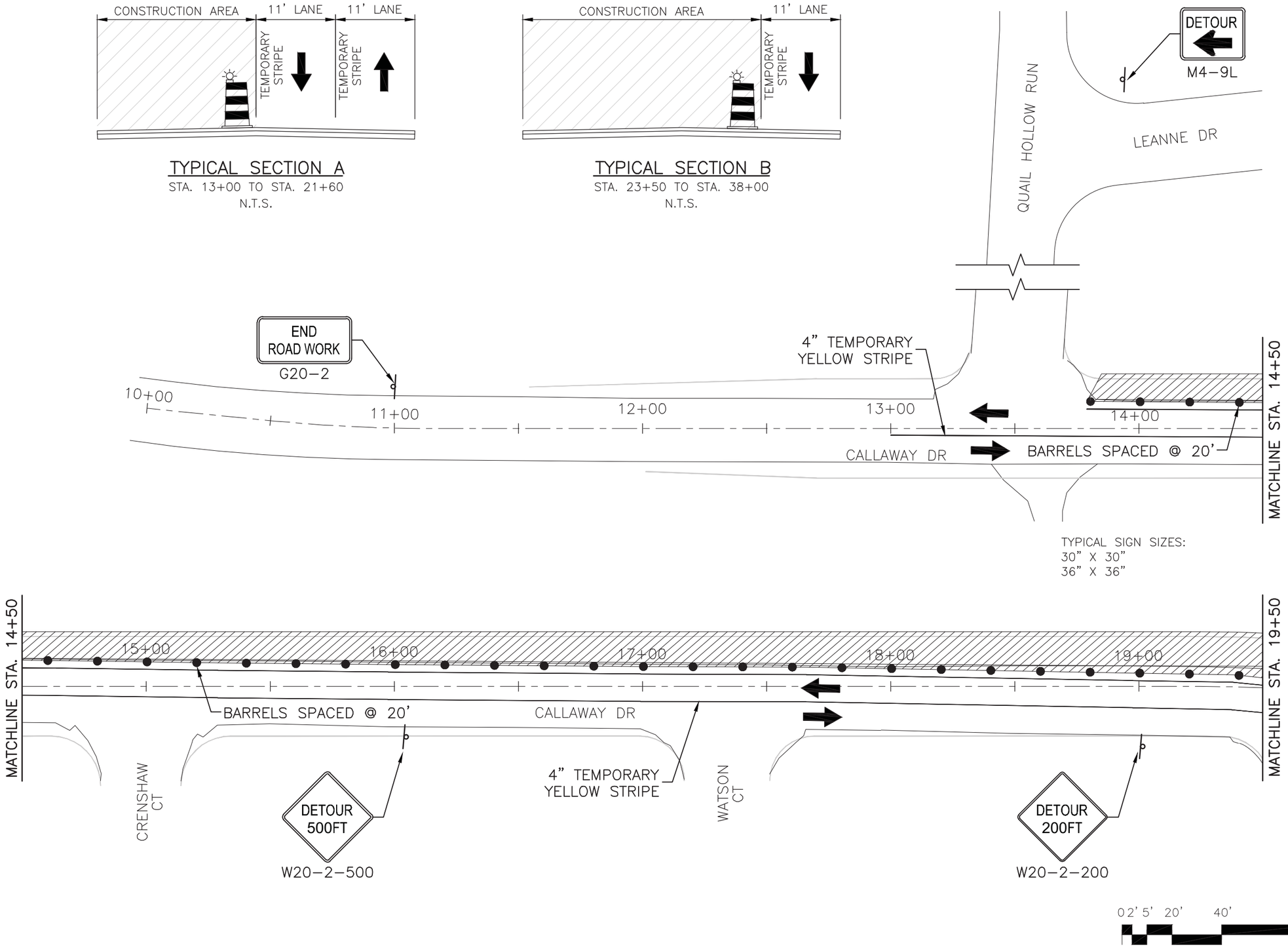

MOLZENCORBIN
1155 Commerce Dr., Suite F
Las Cruces, New Mexico 88011
575 522 0049 office
575 522 7884 fax
MolzenCorbin.com

WYATT D. KARTCHNER
NEW MEXICO
20843
10/15/15
REGISTERED PROFESSIONAL ENGINEER

REV NO	REV DATE	DESCRIPTION

PROJECT NUMBER: CRS133-12
DESIGNED BY: WDK
DRAWN BY: EG
CHECKED BY: JTM
PROJ ENGINEER: WDK
PROJECT DATE: OCTOBER 2015

CALLAWAY DRIVE
TRAFFIC CONTROL PLAN
PHASE 1

CALLAWAY DRIVE
CITY OF CARLSBAD
CARLSBAD, NEW MEXICO

C-133
SHEET

© COPYRIGHT

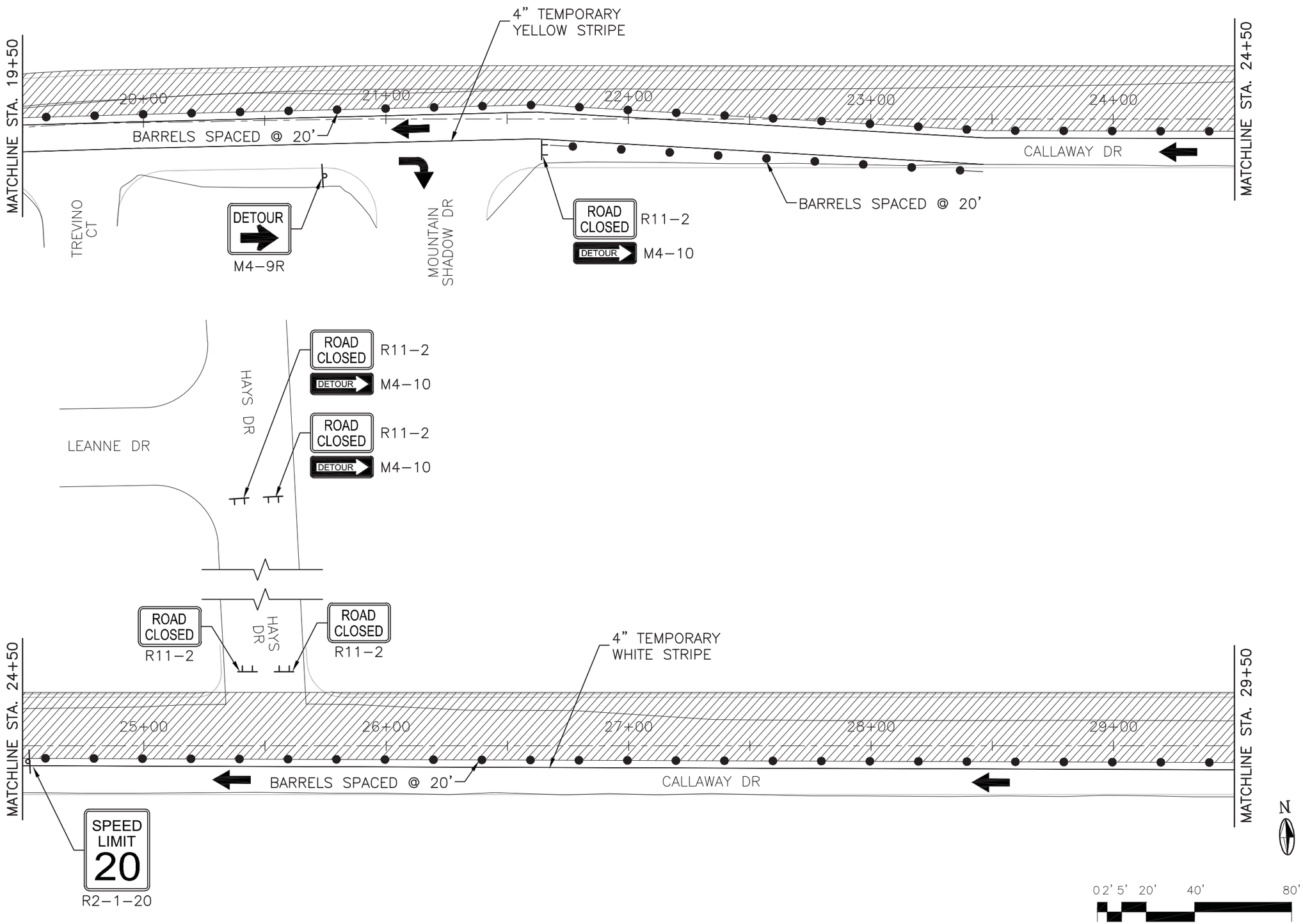

MOLZENCORBIN
1155 Commerce Dr., Suite F
Las Cruces, New Mexico 88011
575 522 0049 office
575 522 7884 fax
MolzenCorbin.com

WYATT D. KARTCHNER
NEW MEXICO
20843
10/15/15
REGISTERED PROFESSIONAL ENGINEER

REV NO	REV DATE	DESCRIPTION

PROJECT NUMBER: CRS133-12
DESIGNED BY: WDK
DRAWN BY: EG
CHECKED BY: JTM
PROJ ENGINEER: WDK
PROJECT DATE: OCTOBER 2015

CALLAWAY DRIVE
TRAFFIC CONTROL PLAN
PHASE 1

CALLAWAY DRIVE
CITY OF CARLSBAD
CARLSBAD, NEW MEXICO

SHEET C-134

© COPYRIGHT

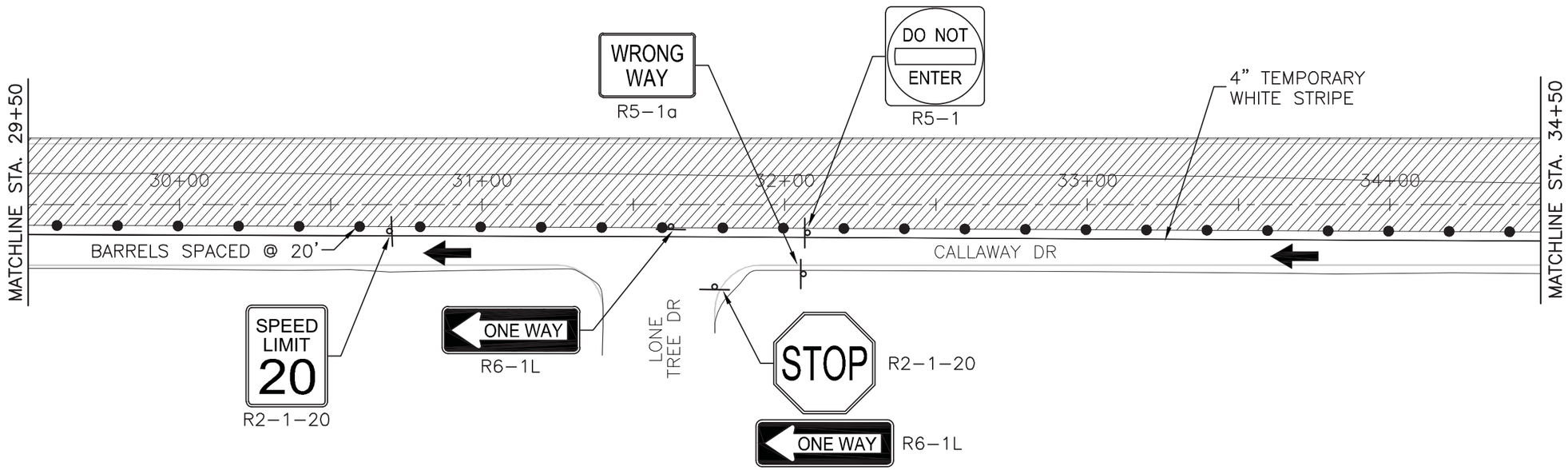

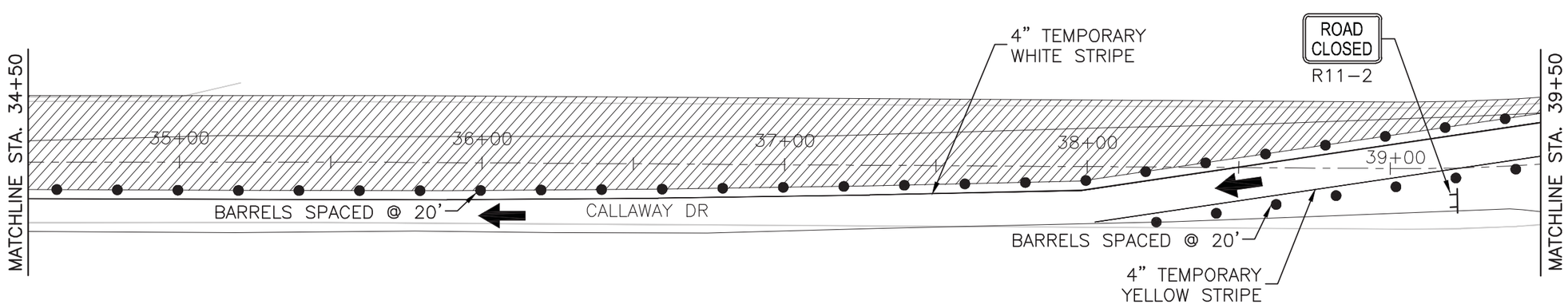

N

0 2' 5' 20' 40' 80'

MOLZENCORBIN
1155 Commerce Dr., Suite F
Las Cruces, New Mexico 88011
575 522 0049 office
575 522 7884 fax
MolzenCorbin.com

WYATT D. KARTCHNER
NEW MEXICO
20843
10/15/15
REGISTERED PROFESSIONAL ENGINEER

REV NO	REV DATE	DESCRIPTION

PROJECT NUMBER: CRS133-12
DESIGNED BY: WDK
DRAWN BY: EG
CHECKED BY: JTM
PROJ ENGINEER: WDK
PROJECT DATE: OCTOBER 2015

CALLAWAY DRIVE
TRAFFIC CONTROL PLAN
PHASE 1

CALLAWAY DRIVE
CITY OF CARLSBAD
CARLSBAD, NEW MEXICO

SHEET C-135

© COPYRIGHT

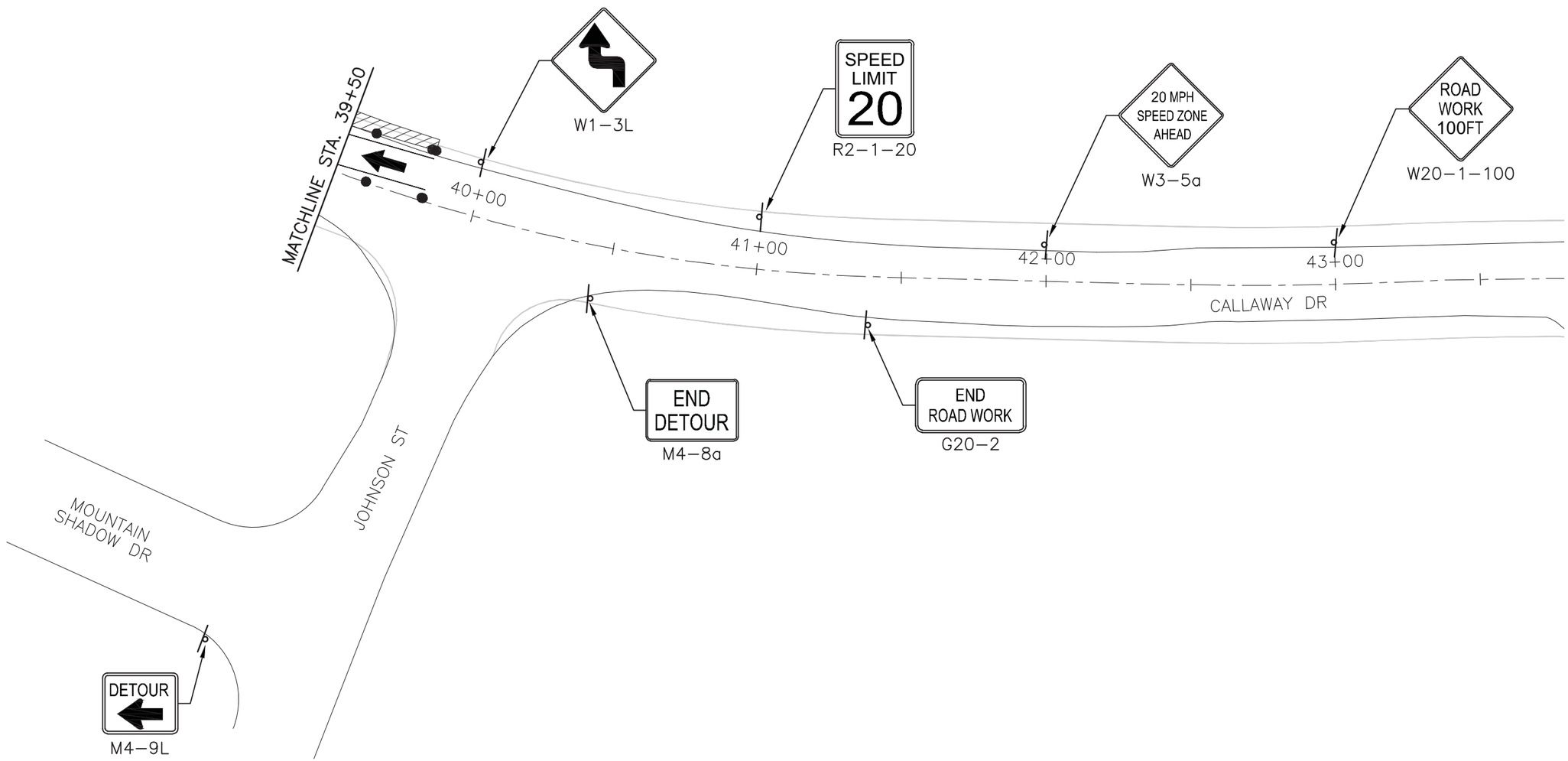

MOLZENCORBIN
1155 Commerce Dr., Suite F
Las Cruces, New Mexico 88011
575 522 0049 office
575 522 7884 fax
MolzenCorbin.com

WYATT D. KARTCHNER
NEW MEXICO
20843
10/15/15
REGISTERED PROFESSIONAL ENGINEER

REV NO	REV DATE	DESCRIPTION

PROJECT NUMBER: CRS133-12
DESIGNED BY: WDK
DRAWN BY: EG
CHECKED BY: JTM
PROJ ENGINEER: WDK
PROJECT DATE: OCTOBER 2015

CALLAWAY DRIVE
TRAFFIC CONTROL PLAN
PHASE 1

CALLAWAY DRIVE
CITY OF CARLSBAD
CARLSBAD, NEW MEXICO

C-136
SHEET

© COPYRIGHT

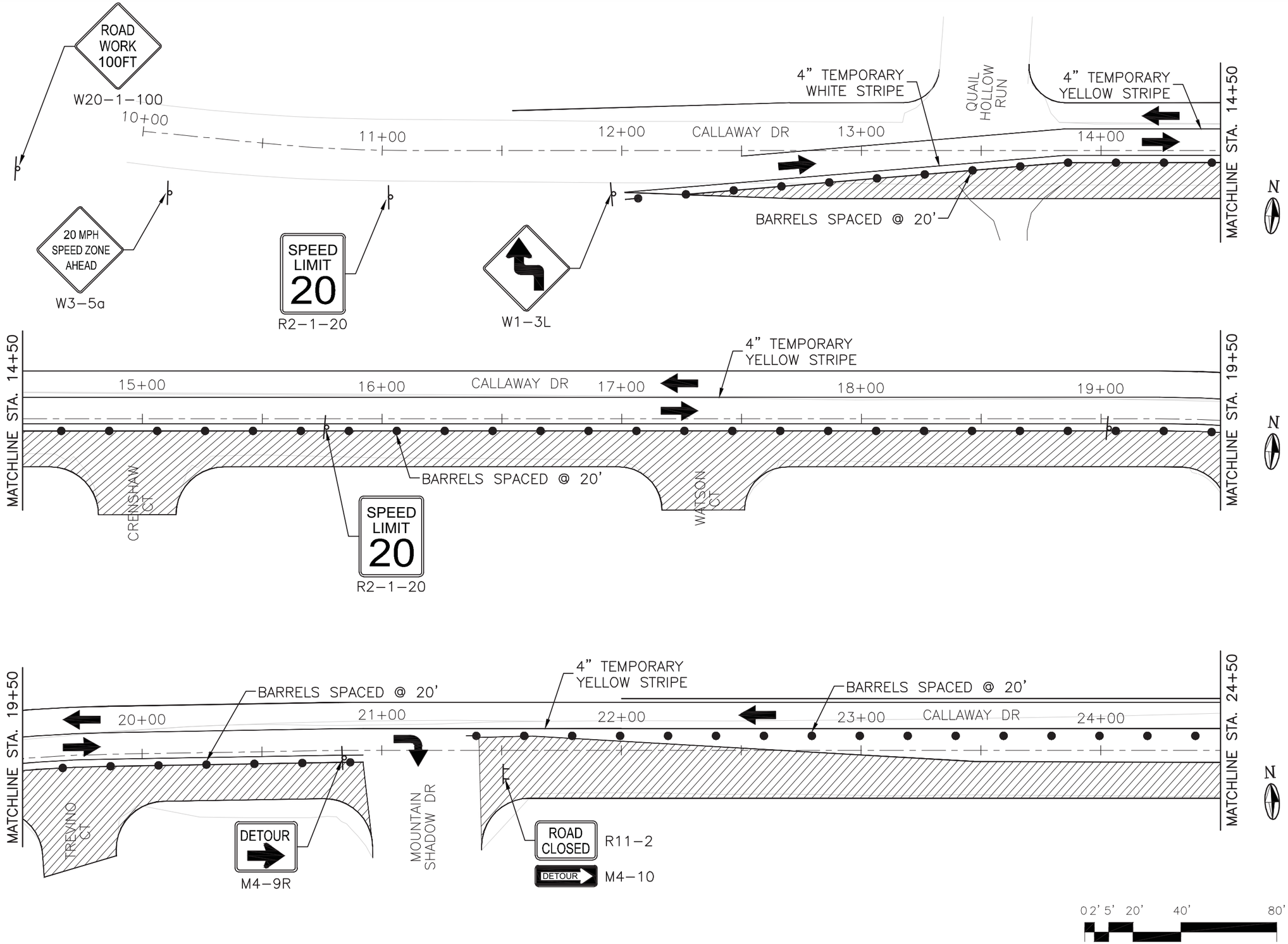

MOLZENCORBIN
1155 Commerce Dr., Suite F
Las Cruces, New Mexico 88011
575 522 0049 office
575 522 7884 fax
MolzenCorbin.com

WYATT D. KARTCHNER
NEW MEXICO
20843
10/15/15
REGISTERED PROFESSIONAL ENGINEER

REV NO	REV DATE	DESCRIPTION

PROJECT NUMBER: CRS133-12
DESIGNED BY: WDK
DRAWN BY: EG
CHECKED BY: JTM
PROJ ENGINEER: WDK
PROJECT DATE: OCTOBER 2015

CALLAWAY DRIVE
TRAFFIC CONTROL PLAN
PHASE 2

CALLAWAY DRIVE
CITY OF CARLSBAD
CARLSBAD, NEW MEXICO

SHEET C-137

© COPYRIGHT

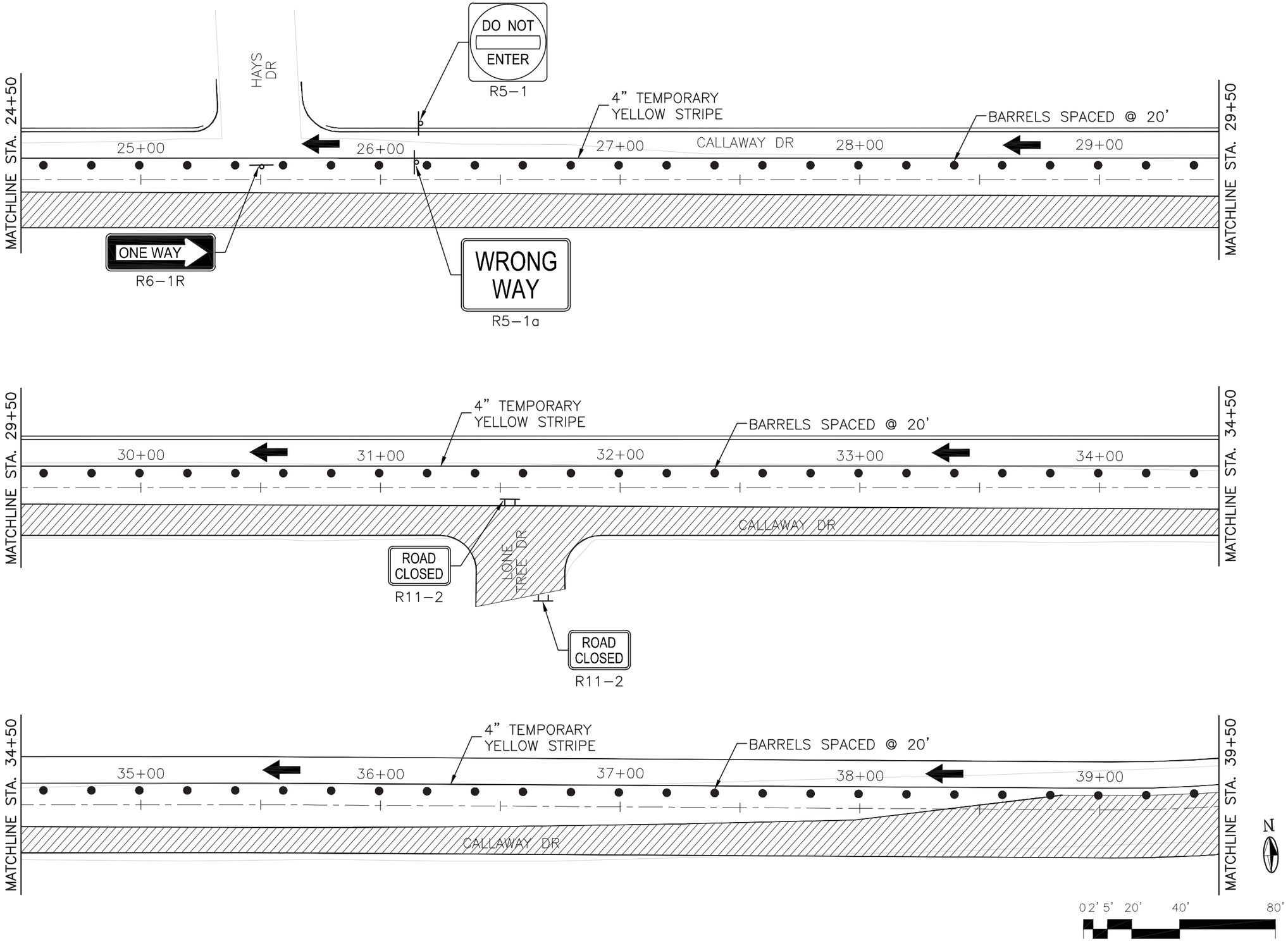

MOLZENCORBIN
1155 Commerce Dr., Suite F
Las Cruces, New Mexico 88011
575 522 0049 office
575 522 7884 fax
MolzenCorbin.com

WYATT D. KARTCHNER
NEW MEXICO
20843
REGISTERED PROFESSIONAL ENGINEER
10/15/15

REV NO	REV DATE	DESCRIPTION

PROJECT NUMBER:	CRS133-12
DESIGNED BY:	WDK
DRAWN BY:	EG
CHECKED BY:	JTM
PROJ ENGINEER:	WDK
PROJECT DATE:	OCTOBER 2015

CALLAWAY DRIVE
TRAFFIC CONTROL PLAN
PHASE 2

CALLAWAY DRIVE
CITY OF CARLSBAD
CARLSBAD, NEW MEXICO

SHEET
C-138

© COPYRIGHT

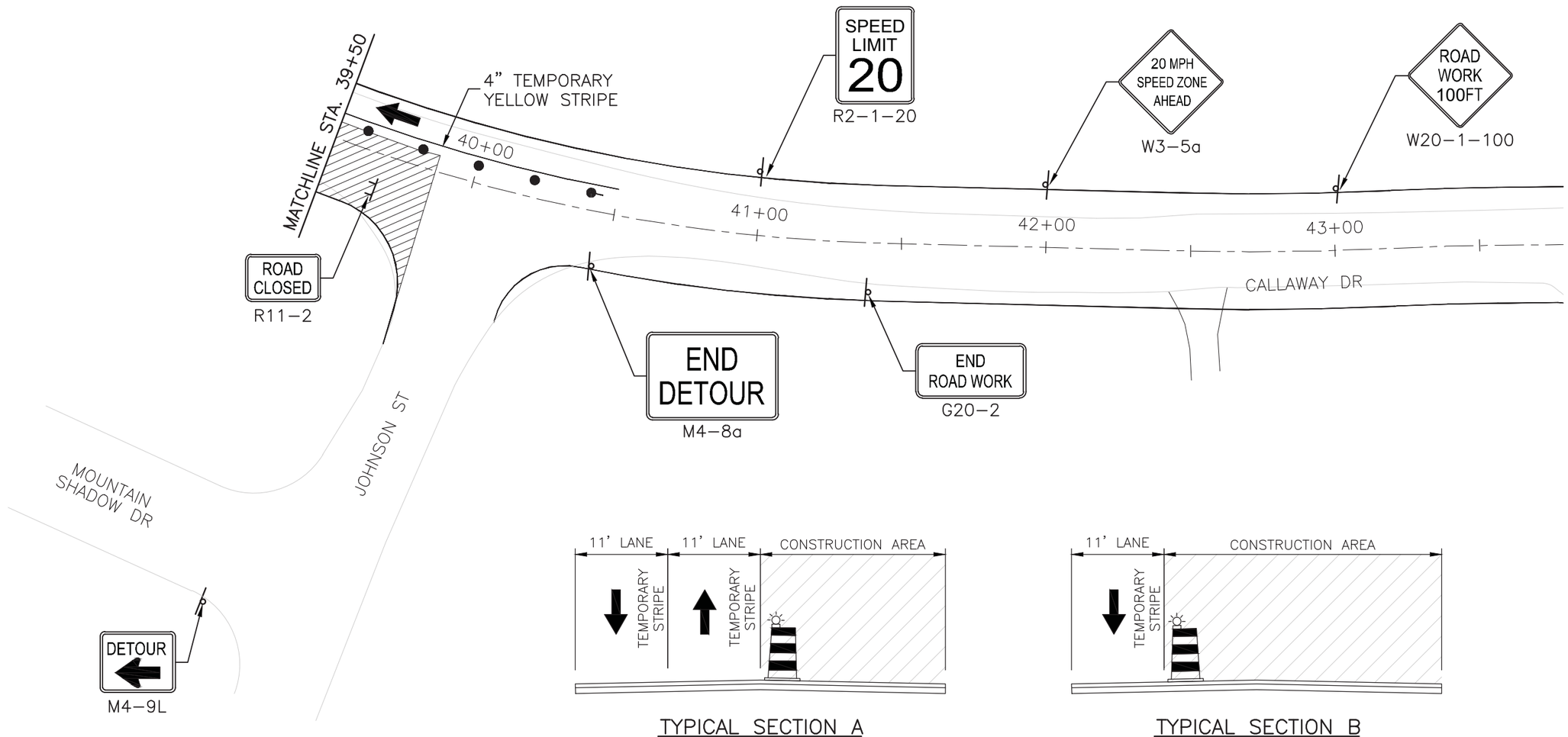

TYPICAL SECTION A
STA. 13+85 TO STA. 21+50
N.T.S.

TYPICAL SECTION B
STA. 21+50 TO STA. 40+50
N.T.S.

MOLZENCORBIN
1155 Commerce Dr., Suite F
Las Cruces, New Mexico 88011
575 522 0049 office
575 522 7884 fax
MolzenCorbin.com

WYATT D. KARTCHNER
NEW MEXICO
20843
10/15/15
REGISTERED PROFESSIONAL ENGINEER

REV NO	REV DATE	DESCRIPTION

PROJECT NUMBER: CRS133-12
DESIGNED BY: WDK
DRAWN BY: EG
CHECKED BY: JTM
PROJ ENGINEER: WDK
PROJECT DATE: OCTOBER 2015

CALLAWAY DRIVE
TRAFFIC CONTROL PLAN
PHASE 2

CALLAWAY DRIVE
CITY OF CARLSBAD
CARLSBAD, NEW MEXICO

C-139
SHEET

© COPYRIGHT

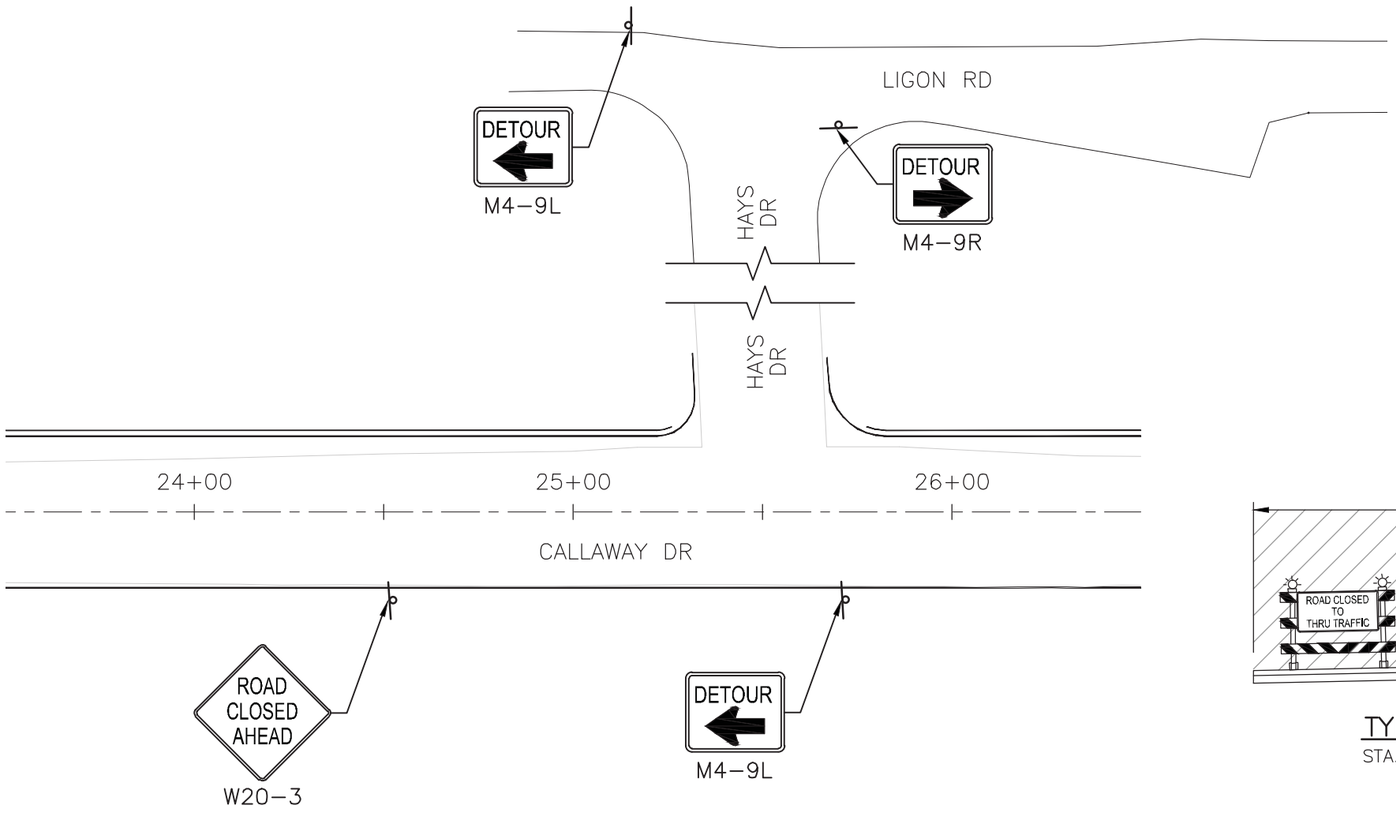

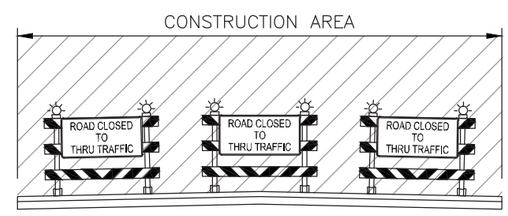

TYPICAL SECTION A
STA. 40+25 TO STA. 53+90
N.T.S.

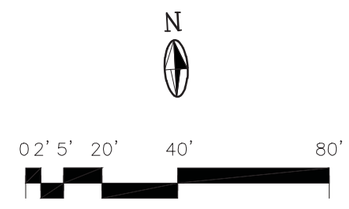

MOLZENCORBIN
1155 Commerce Dr., Suite F
Las Cruces, New Mexico 88011
575 522 0049 office
575 522 7884 fax
MolzenCorbin.com

WYATT D. KARTCHNER
NEW MEXICO
20843
10/15/15
REGISTERED PROFESSIONAL ENGINEER

REV NO	REV DATE	DESCRIPTION

PROJECT NUMBER: CRS133-12
DESIGNED BY: WDK
DRAWN BY: EG
CHECKED BY: JTM
PROJ ENGINEER: WDK
PROJECT DATE: OCTOBER 2015

CALLAWAY DRIVE
TRAFFIC CONTROL PLAN
PHASE 3

CALLAWAY DRIVE
CITY OF CARLSBAD
CARLSBAD, NEW MEXICO

C-140
SHEET

© COPYRIGHT

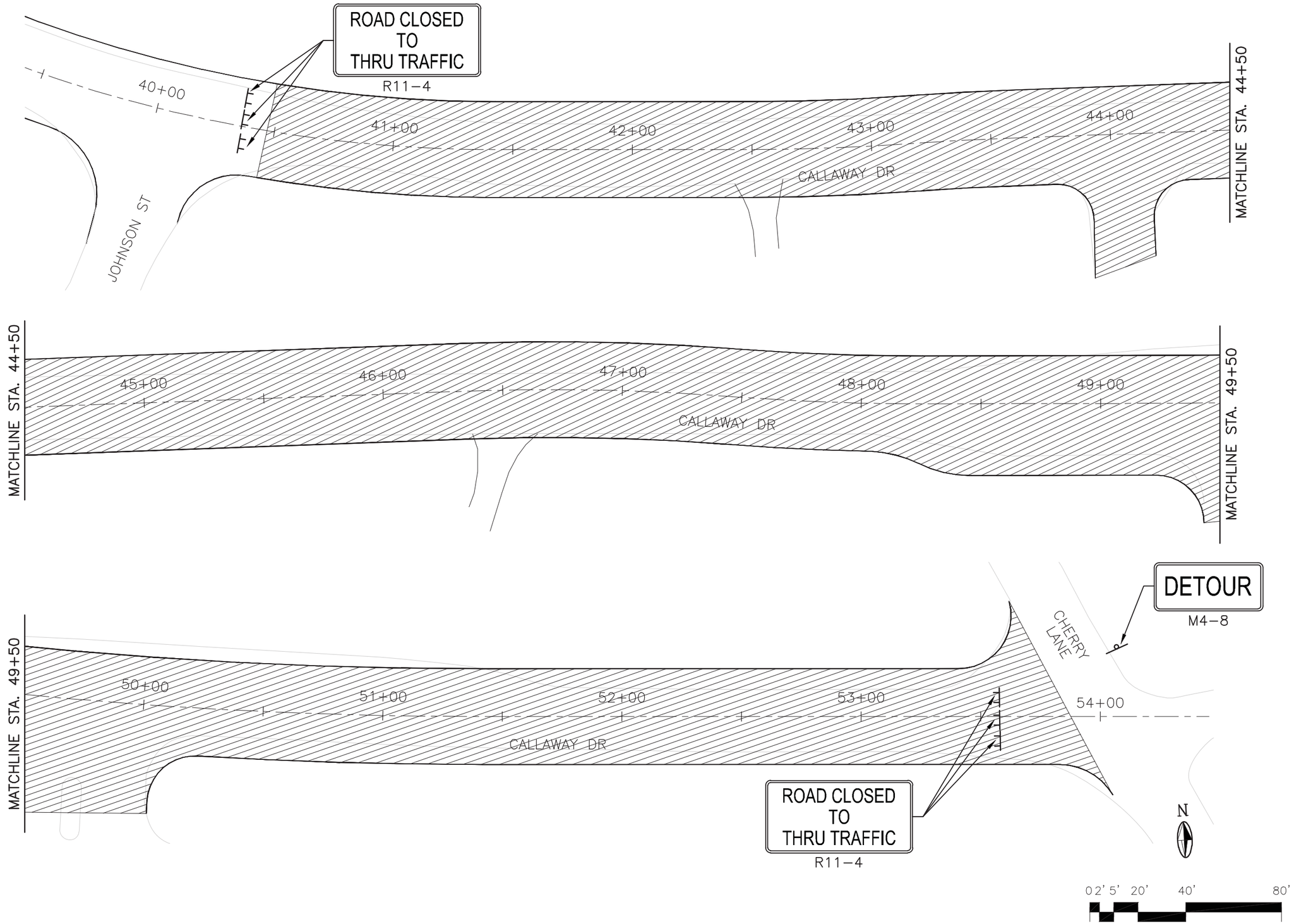

MOLZENCORBIN
1155 Commerce Dr., Suite F
Las Cruces, New Mexico 88011
575 522 0049 office
575 522 7884 fax
MolzenCorbin.com

WYATT D. KARTCHNER
NEW MEXICO
20843
10/15/15
REGISTERED PROFESSIONAL ENGINEER

REV NO	REV DATE	DESCRIPTION

PROJECT NUMBER: CRS133-12
DESIGNED BY: WDK
DRAWN BY: EG
CHECKED BY: JTM
PROJ ENGINEER: WDK
PROJECT DATE: OCTOBER 2015

CALLAWAY DRIVE
TRAFFIC CONTROL PLAN
PHASE 3

CALLAWAY DRIVE
CITY OF CARLSBAD
CARLSBAD, NEW MEXICO

SHEET C-141

© COPYRIGHT

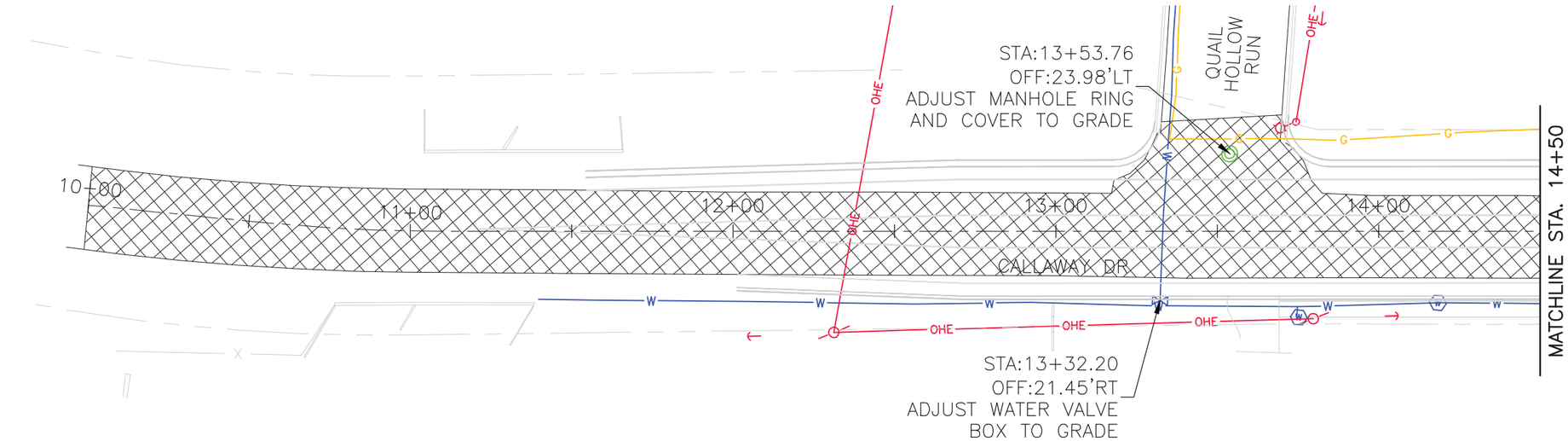

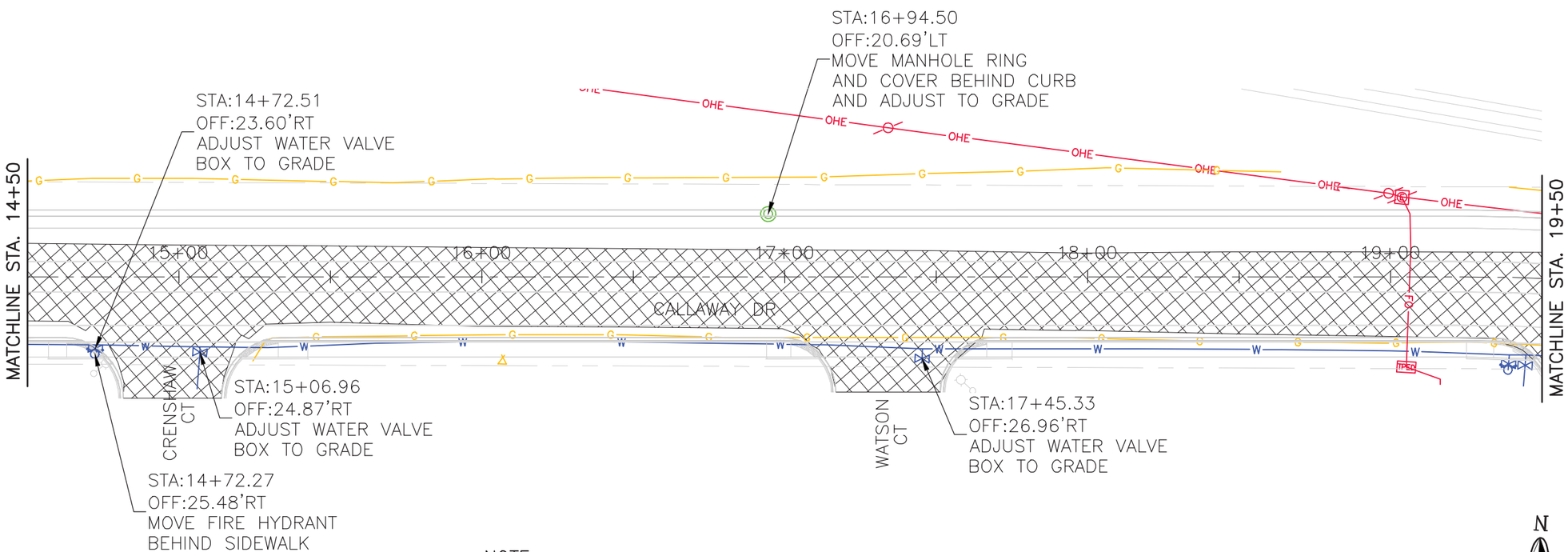

NOTE:
ALL WATER SERVICES SHALL BE REMOVED TO THE EXISTING CORP. STOP, INCLUDING METER AND METER BOX. INSTALL ALL NEW MUNICIPEX LINE FROM THE CORP. STOP TO THE NEW METER LOCATION. INSTALL NEW METERS PER CITY STANDARDS AS SHOWN ON C-502.

REMOVAL OF SURFACING

0 2' 5' 20' 40' 80'

MOLZENCORBIN
1155 Commerce Dr., Suite F
Las Cruces, New Mexico 88011
575 522 0049 office
575 522 7884 fax
MolzenCorbin.com

WYATT D. KARTCHNER
NEW MEXICO
20843
10/15/15
REGISTERED PROFESSIONAL ENGINEER

REV NO	REV DATE	DESCRIPTION

PROJECT NUMBER:	CRS133-12
DESIGNED BY:	WDK
DRAWN BY:	EG
CHECKED BY:	JTM
PROJ ENGINEER:	WDK
PROJECT DATE:	OCTOBER 2015

REMOVALS AND RELOCATES

CALLAWAY DRIVE
CITY OF CARLSBAD
CARLSBAD, NEW MEXICO

C-142

SHEET

© COPYRIGHT

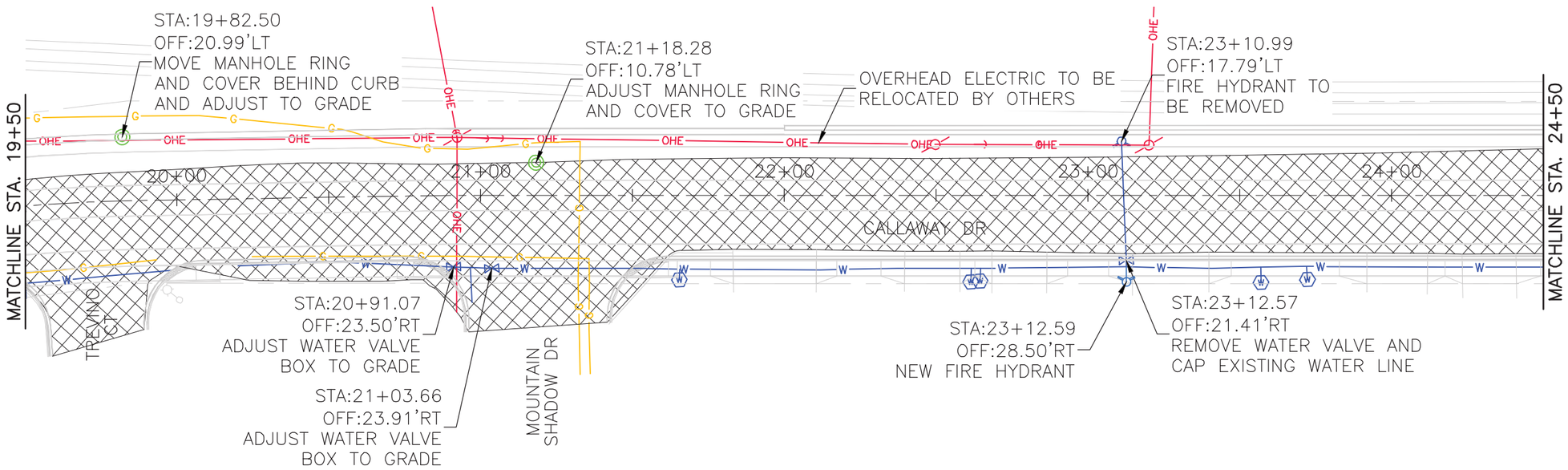

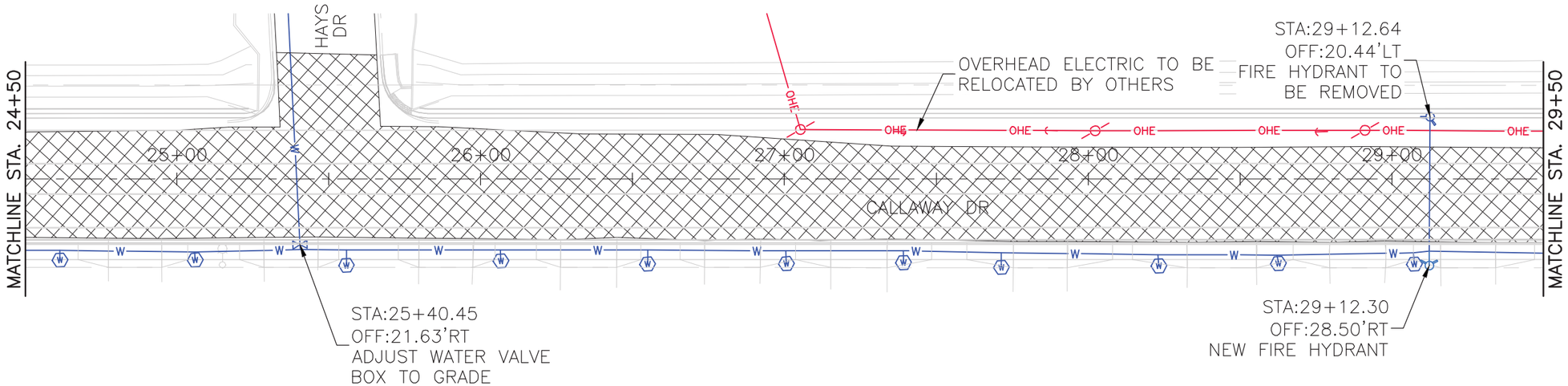

NOTE:
ALL WATER SERVICES SHALL BE REMOVED TO THE EXISTING CORP. STOP, INCLUDING METER AND METER BOX. INSTALL ALL NEW MUNICIPEX LINE FROM THE CORP. STOP TO THE NEW METER LOCATION. INSTALL NEW METERS PER CITY STANDARDS AS SHOWN ON C-502.

REMOVAL OF SURFACING

N

0 2' 5' 20' 40' 80'

MOLZENCORBIN
1155 Commerce Dr., Suite F
Las Cruces, New Mexico 88011
575 522 0049 office
575 522 7884 fax
MolzenCorbin.com

WYATT D. KARTCHNER
NEW MEXICO
20843
REGISTERED PROFESSIONAL ENGINEER
10/15/15

REV NO	REV DATE	DESCRIPTION

PROJECT NUMBER: CRS133-12
DESIGNED BY: WDK
DRAWN BY: EG
CHECKED BY: JTM
PROJ ENGINEER: WDK
PROJECT DATE: OCTOBER 2015

REMOVALS AND RELOCATES

CALLAWAY DRIVE
CITY OF CARLSBAD
CARLSBAD, NEW MEXICO

C-143
SHEET

© COPYRIGHT

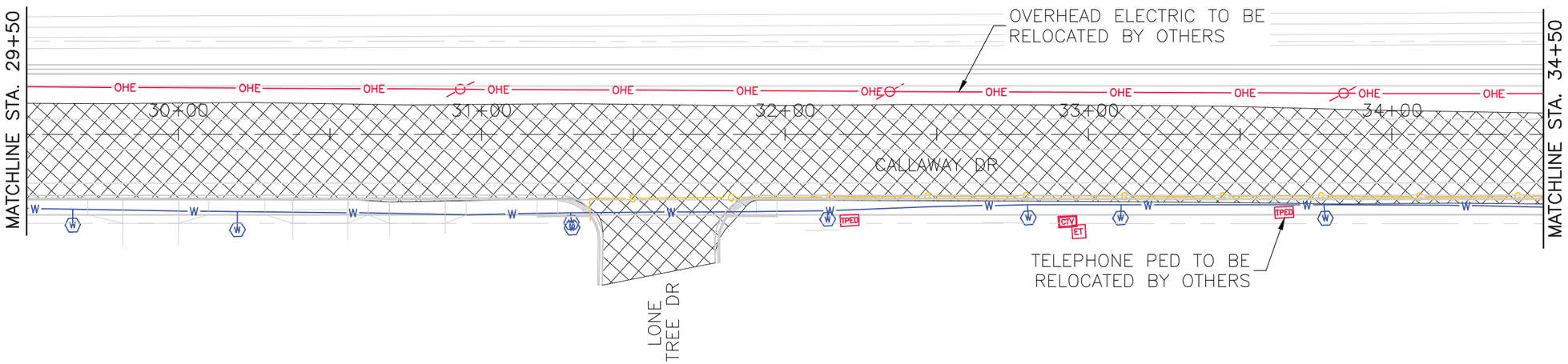

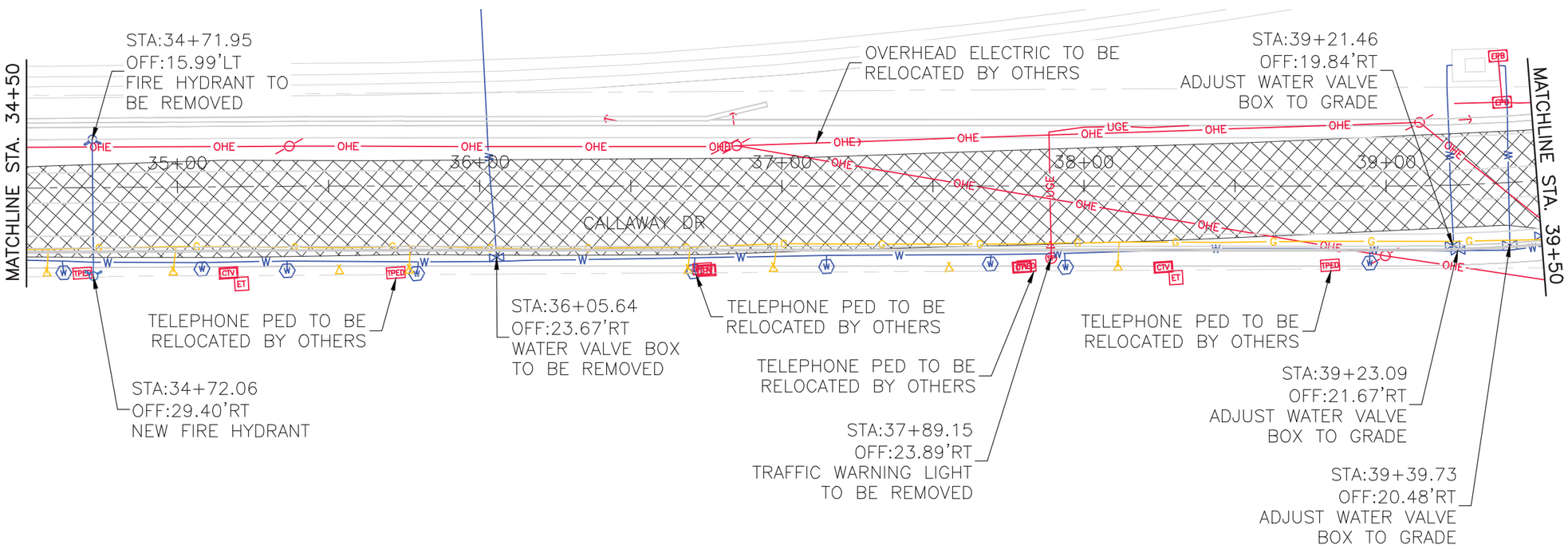

NOTE:
ALL WATER SERVICES SHALL BE REMOVED TO THE EXISTING CORP. STOP, INCLUDING METER AND METER BOX. INSTALL ALL NEW MUNICIPEX LINE FROM THE CORP. STOP TO THE NEW METER LOCATION. INSTALL NEW METERS PER CITY STANDARDS AS SHOWN ON C-502.

REMOVAL OF SURFACING

N

0 2' 5' 20' 40' 80'

MOLZENCORBIN
1155 Commerce Dr., Suite F
Las Cruces, New Mexico 88011
575 522 0049 office
575 522 7884 fax
MolzenCorbin.com

WYATT D. KARTCHNER
NEW MEXICO
20843
10/15/15
REGISTERED PROFESSIONAL ENGINEER

REV NO	REV DATE	DESCRIPTION

PROJECT NUMBER: CRS133-12
DESIGNED BY: WDK
DRAWN BY: EG
CHECKED BY: JTM
PROJ ENGINEER: WDK
PROJECT DATE: OCTOBER 2015

REMOVALS AND RELOCATES

CALLAWAY DRIVE
CITY OF CARLSBAD
CARLSBAD, NEW MEXICO

C-144

SHEET

© COPYRIGHT

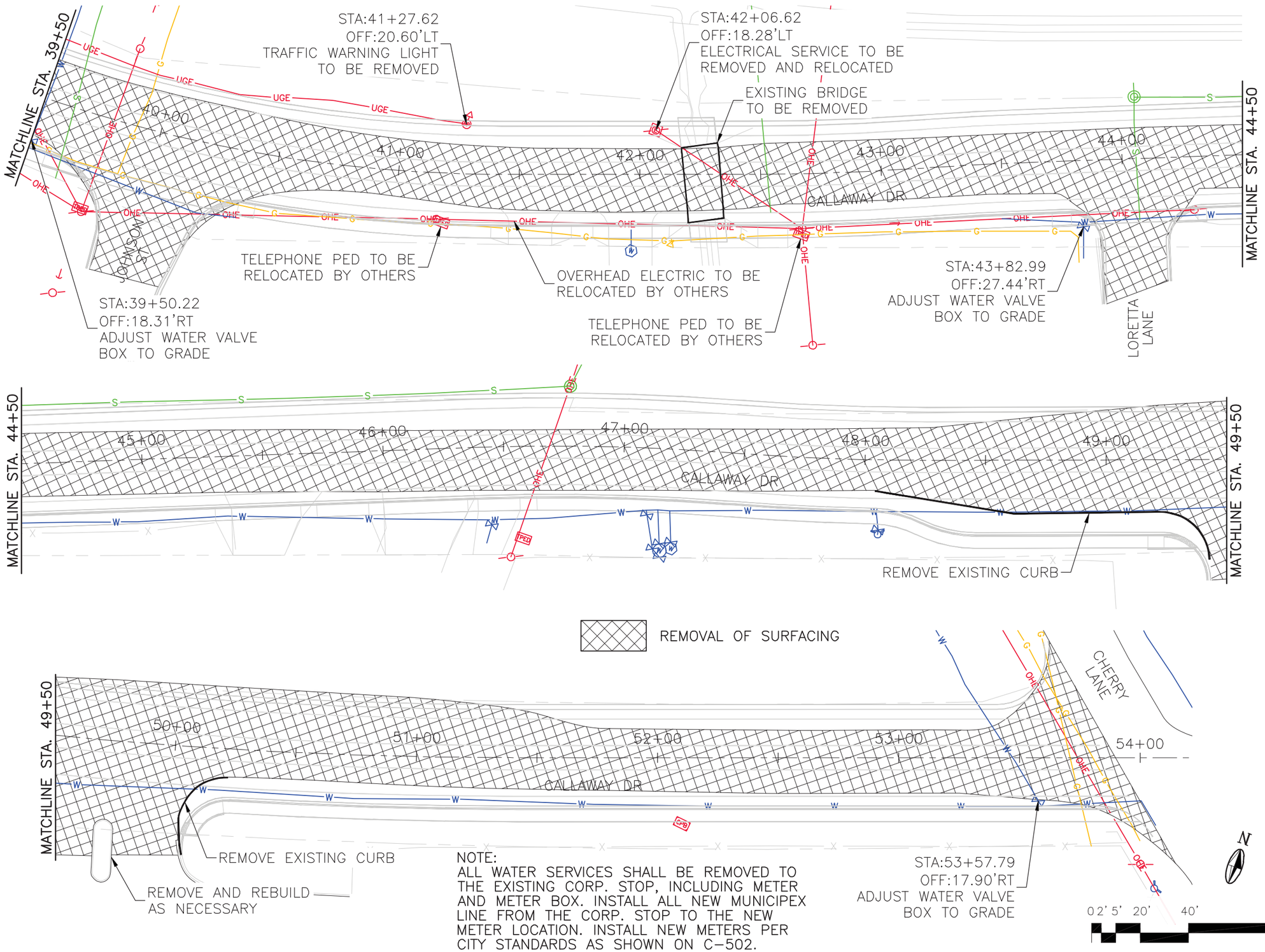

NOTE:
ALL WATER SERVICES SHALL BE REMOVED TO THE EXISTING CORP. STOP, INCLUDING METER AND METER BOX. INSTALL ALL NEW MUNICIPEX LINE FROM THE CORP. STOP TO THE NEW METER LOCATION. INSTALL NEW METERS PER CITY STANDARDS AS SHOWN ON C-502.

MOLZENCORBIN
1155 Commerce Dr., Suite F
Las Cruces, New Mexico 88011
575 522 0049 office
575 522 7884 fax
MolzenCorbin.com

WYATT D. KARTCHNER
NEW MEXICO
20843
10/15/15
REGISTERED PROFESSIONAL ENGINEER

REV NO	REV DATE	DESCRIPTION

PROJECT NUMBER:	CRS133-12
DESIGNED BY:	WDK
DRAWN BY:	EG
CHECKED BY:	JTM
PROJ ENGINEER:	WDK
PROJECT DATE:	OCTOBER 2015

REMOVALS AND RELOCATES

CALLAWAY DRIVE
CITY OF CARLSBAD
CARLSBAD, NEW MEXICO

C-145

SHEET

© COPYRIGHT

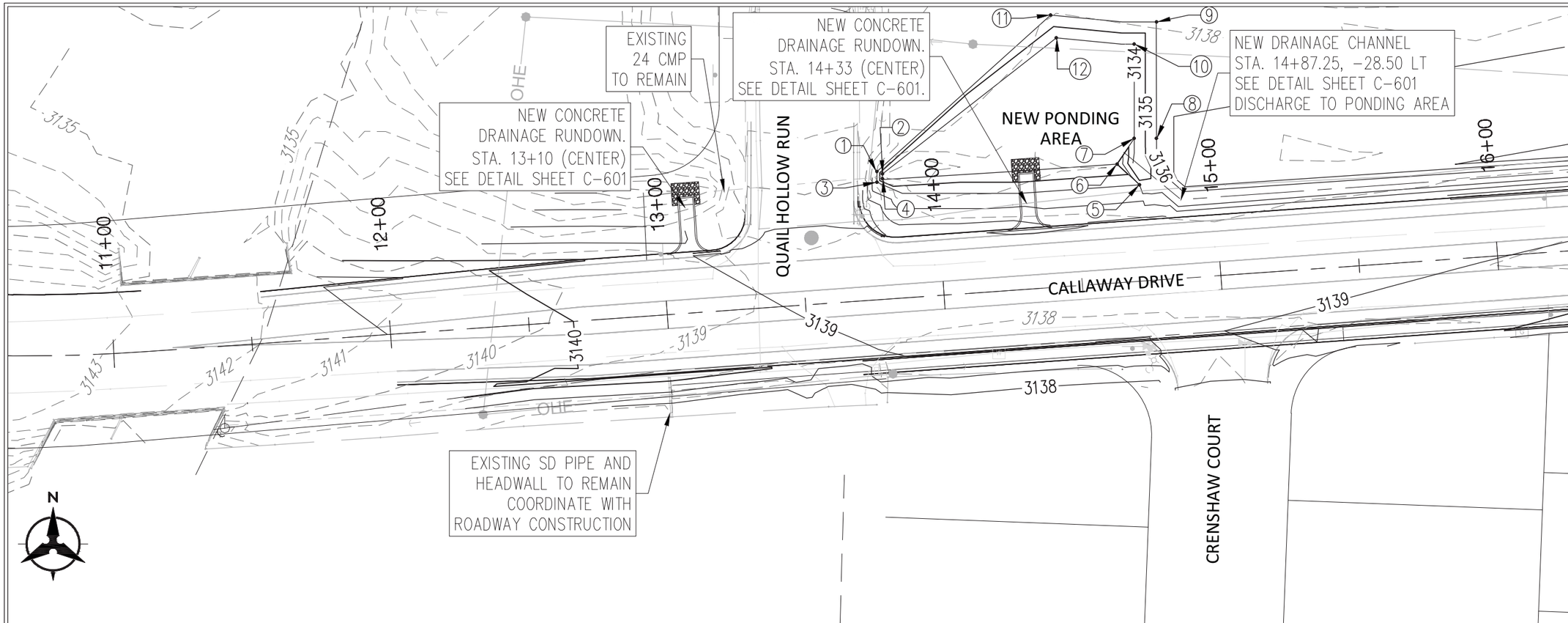

40 20 0 40

1"=40'

PLAN

CALLAWAY DRIVE

2

2

Point Table					
Structure Name	Description	Station & Offset	Northing	Easting	Elevation
1	TOP POND	13+78.98, -46.125' LT	527943.28	565662.44	3136.00
2	BOTTOM POND	13+80.91, -45.095' LT	527942.39	565664.44	3134.00
3	TOP POND	13+78.71, -42.242' LT	527939.39	565662.44	3136.00
4	BOTTOM POND	13+80.79, -43.407' LT	527940.70	565664.44	3134.00
5	TOP POND	14+73.09, -34.646' LT	527938.47	565757.12	3136.00
6	BOTTOM POND	14+65.56, -42.646' LT	527945.92	565749.04	3136.00

Point Table					
Structure Name	Description	Station & Offset	Northing	Easting	Elevation
7	BOTTOM POND	14+72.37, -51.455' LT	527955.19	565755.21	3134.00
8	TOP POND	14+80.36, -50.908' LT	527955.21	565763.23	3136.00
9	TOP POND	14+83.33, -92.774' LT	527997.18	565763.23	3136.00
10	BOTTOM POND	14+74.72, -85.364' LT	527989.18	565755.17	3134.00
11	TOP POND	14+45.46, -97.921' LT	527999.64	565725.09	3136.00
12	BOTTOM POND	14+46.93, -89.564' LT	527991.41	565727.15	3134.00

Bohannan Huston
www.b□inc.com
800.877.5□□2

NOTICE OF EXTENDED PAYMENT PROVISION:
THIS CONTRACT ALLOWS THE OWNER TO MAKE PAYMENT WITHIN 45 DAYS AFTER SUBMISSION OF AN UNDISPUTED REQUEST FOR PAYMENT

ANDREW G. GUERRA
NEW MEXICO
19125
PROFESSIONAL ENGINEER
2-22-16

REV NO.	REV DATE	DESCRIPTION
2	2/22/16	ROADWAY & STORM DRAIN MODIFICATIONS

PROJECT NUMBER: CRS143-12
DESIGNED BY: AG
DRAWN BY: JM
CHECKED BY: AG
PROJECT DATE: OCTOBER 2015

CALLAWAY DRIVE
STORM DRAIN PLAN AND PROFILE

CALLAWAY DRIVE
CITY OF CARLSBAD
CARLSBAD, NEW MEXICO

C-200
SHEET

© COPYRIGHT

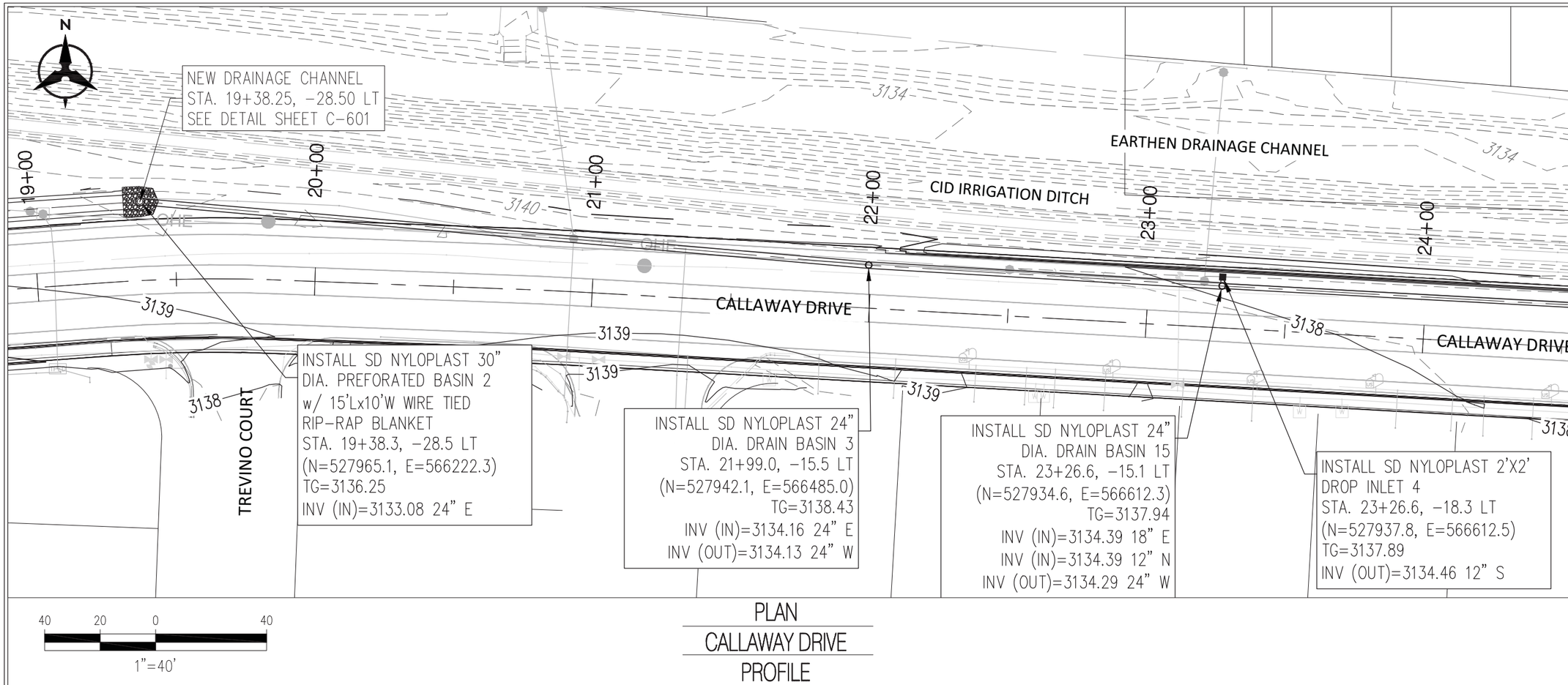

40 20 0 40

1"=40'

PLAN

CALLAWAY DRIVE

PROFILE

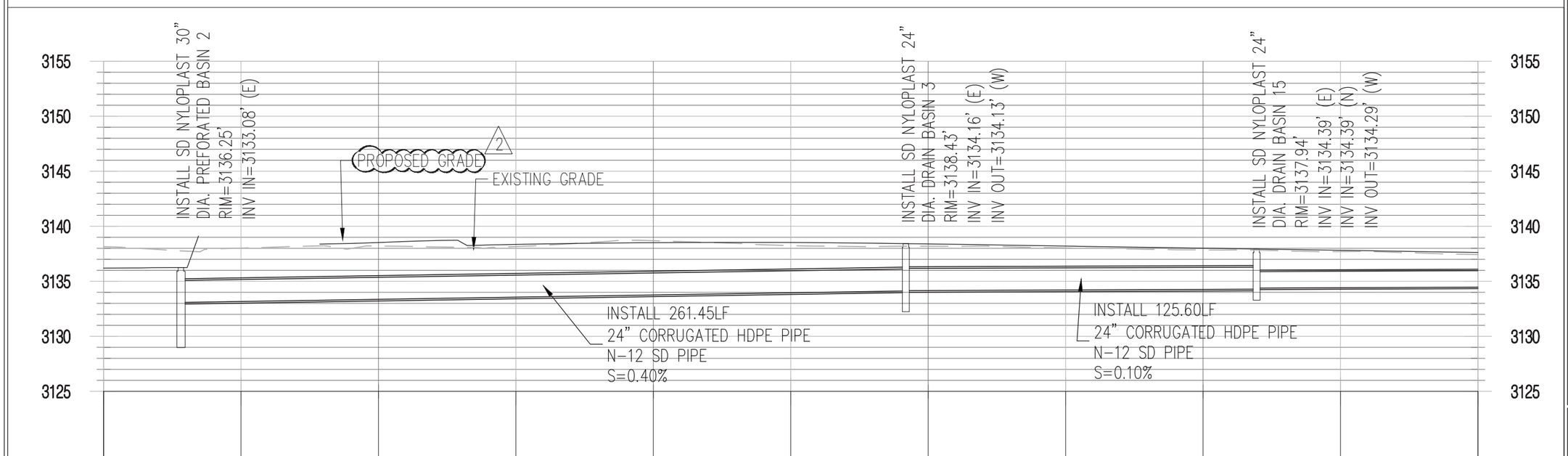

Bohannan Huston

www.b□inc.com

800.877.5□□2

NOTICE OF EXTENDED PAYMENT PROVISION: THIS CONTRACT ALLOWS THE OWNER TO MAKE PAYMENT WITHIN 45 DAYS AFTER SUBMISSION OF AN UNDISPUTED REQUEST FOR PAYMENT

ANDREW G. GUERRA
NEW MEXICO
19125
PROFESSIONAL ENGINEER

2-22-16

REV NO.	REV DATE	DESCRIPTION
2	2/22/16	ROADWAY & STORM DRAIN MODIFICATIONS

PROJECT NUMBER: CRS143-12

DESIGNED BY: AG

DRAWN BY: JM

CHECKED BY: AG

PROJECT DATE: OCTOBER 2015

CALLAWAY DRIVE
STORM DRAIN PLAN AND PROFILE

CALLAWAY DRIVE
CITY OF CARLSBAD
CARLSBAD, NEW MEXICO

C-201

SHEET

© COPYRIGHT

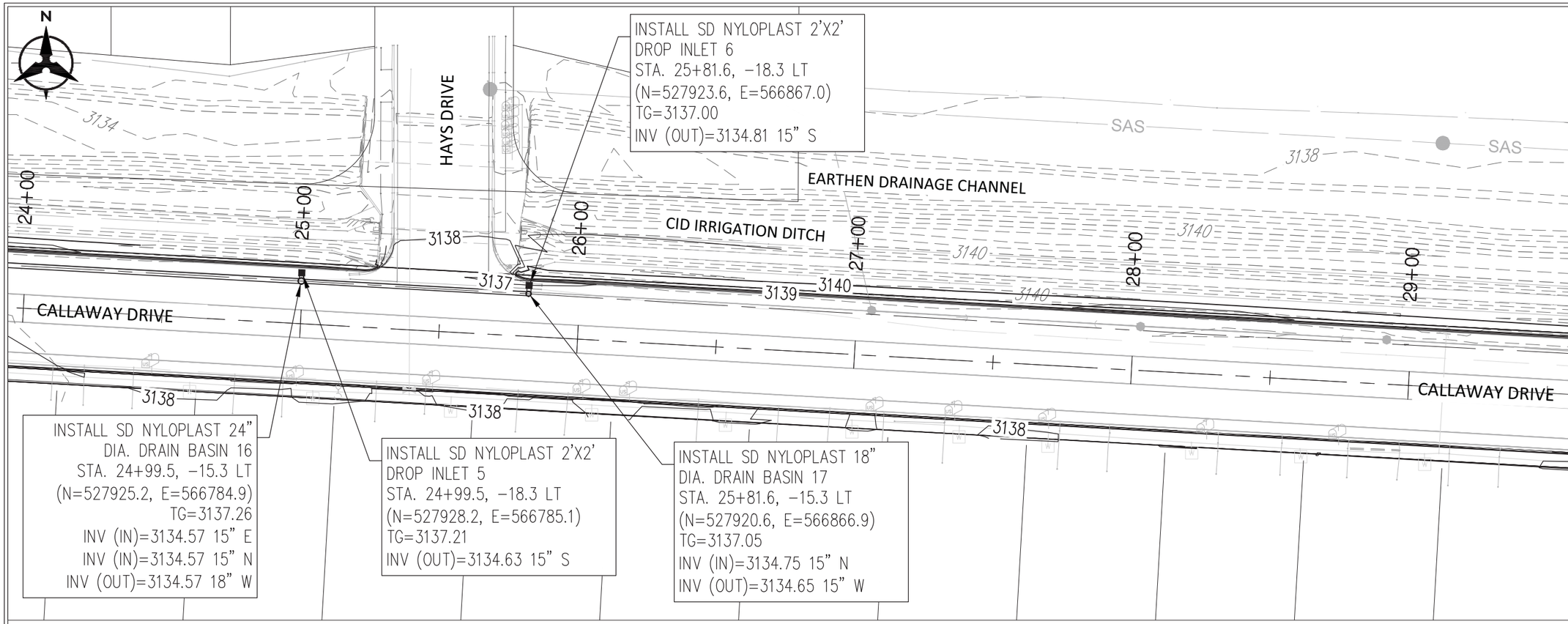

40 20 0 40

1"=40'

PLAN

CALLAWAY DRIVE

PROFILE

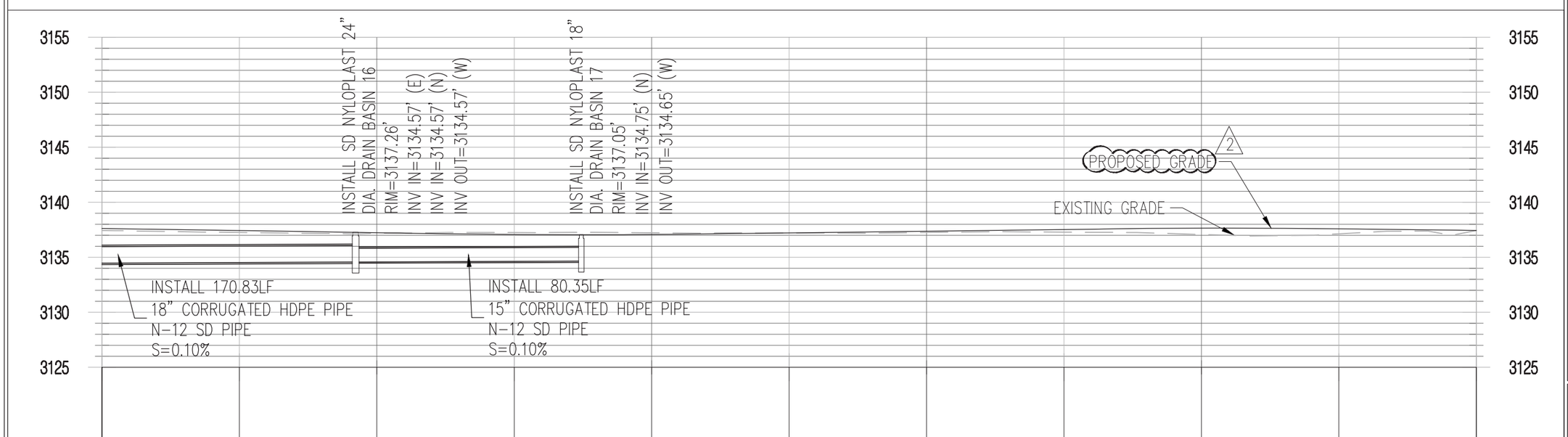

Bohannan Huston

www.b□inc.com

800.877.5□□2

NOTICE OF EXTENDED PAYMENT PROVISION: THIS CONTRACT ALLOWS THE OWNER TO MAKE PAYMENT WITHIN 45 DAYS AFTER SUBMISSION OF AN UNDISPUTED REQUEST FOR PAYMENT

ANDREW G. GUERRA
NEW MEXICO
19125
PROFESSIONAL ENGINEER

2-22-16

REV NO.	REV DATE	DESCRIPTION
2	2/22/16	ROADWAY & STORM DRAIN MODIFICATIONS

PROJECT NUMBER: CRS143-12

DESIGNED BY: AG

DRAWN BY: JM

CHECKED BY: AG

PROJECT DATE: OCTOBER 2015

CALLAWAY DRIVE
STORM DRAIN PLAN AND PROFILE

CALLAWAY DRIVE
CITY OF CARLSBAD
CARLSBAD, NEW MEXICO

C-202

SHEET

© COPYRIGHT

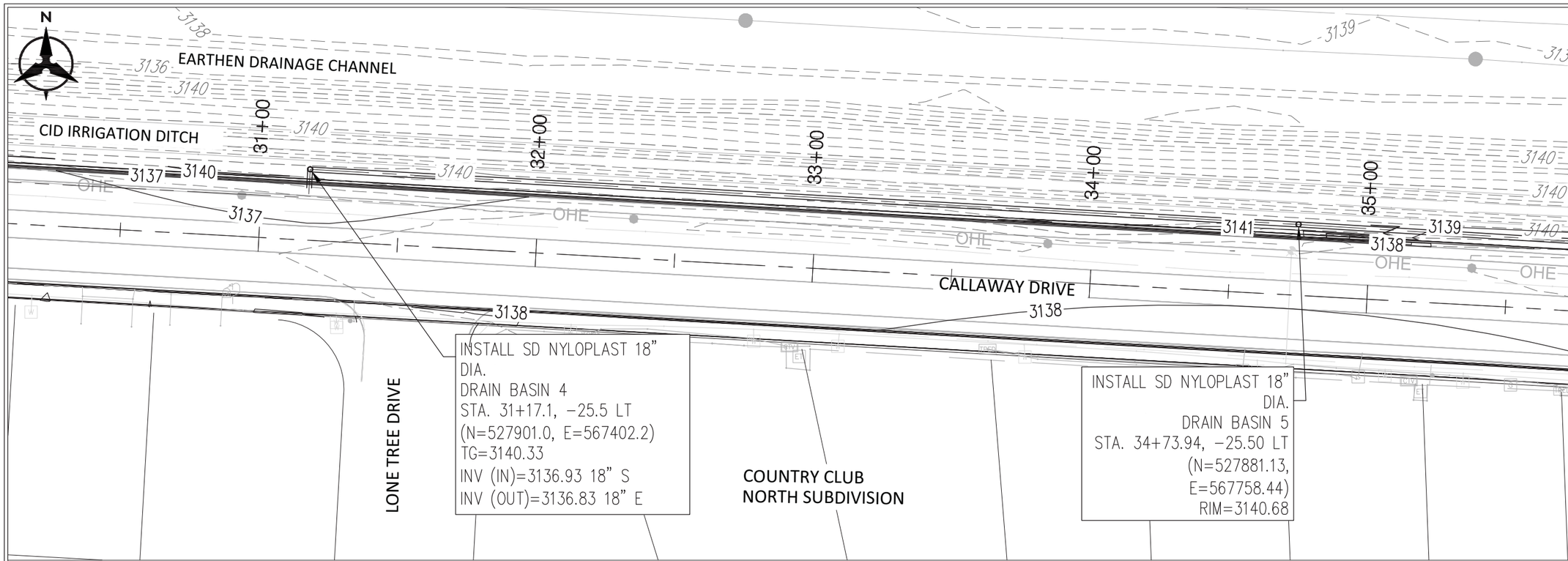

40 20 0 40

1"=40'

PLAN

CALLAWAY DRIVE

PROFILE

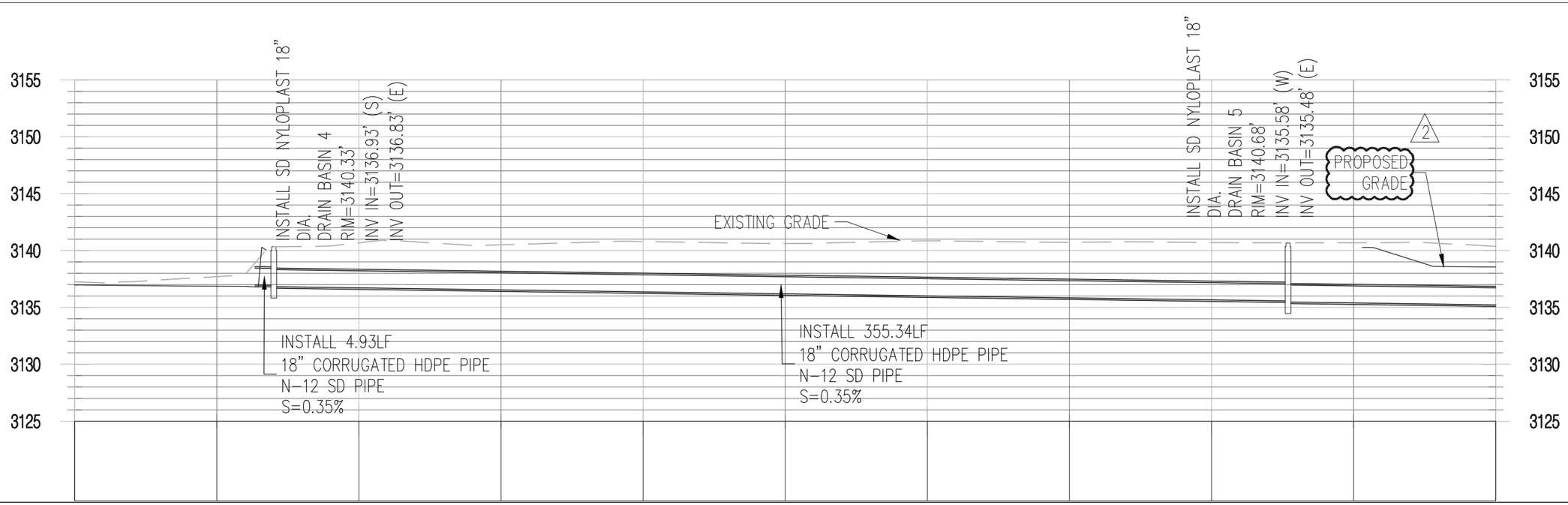

Bohannan Huston

www.b□inc.com

800.877.5□□2

NOTICE OF EXTENDED PAYMENT PROVISION: THIS CONTRACT ALLOWS THE OWNER TO MAKE PAYMENT WITHIN 45 DAYS AFTER SUBMISSION OF AN UNDISPUTED REQUEST FOR PAYMENT

ANDREW G. GUERRA
NEW MEXICO
19125
PROFESSIONAL ENGINEER

2-22-16

REV NO.	REV DATE	DESCRIPTION
2	2/22/16	ROADWAY & STORM DRAIN MODIFICATIONS

PROJECT NUMBER: CRS143-12

DESIGNED BY: AG

DRAWN BY: JM

CHECKED BY: AG

PROJECT DATE: OCTOBER 2015

CALLAWAY DRIVE
STORM DRAIN PLAN AND PROFILE

CALLAWAY DRIVE
CITY OF CARLSBAD
CARLSBAD, NEW MEXICO

C-203

SHEET

© COPYRIGHT

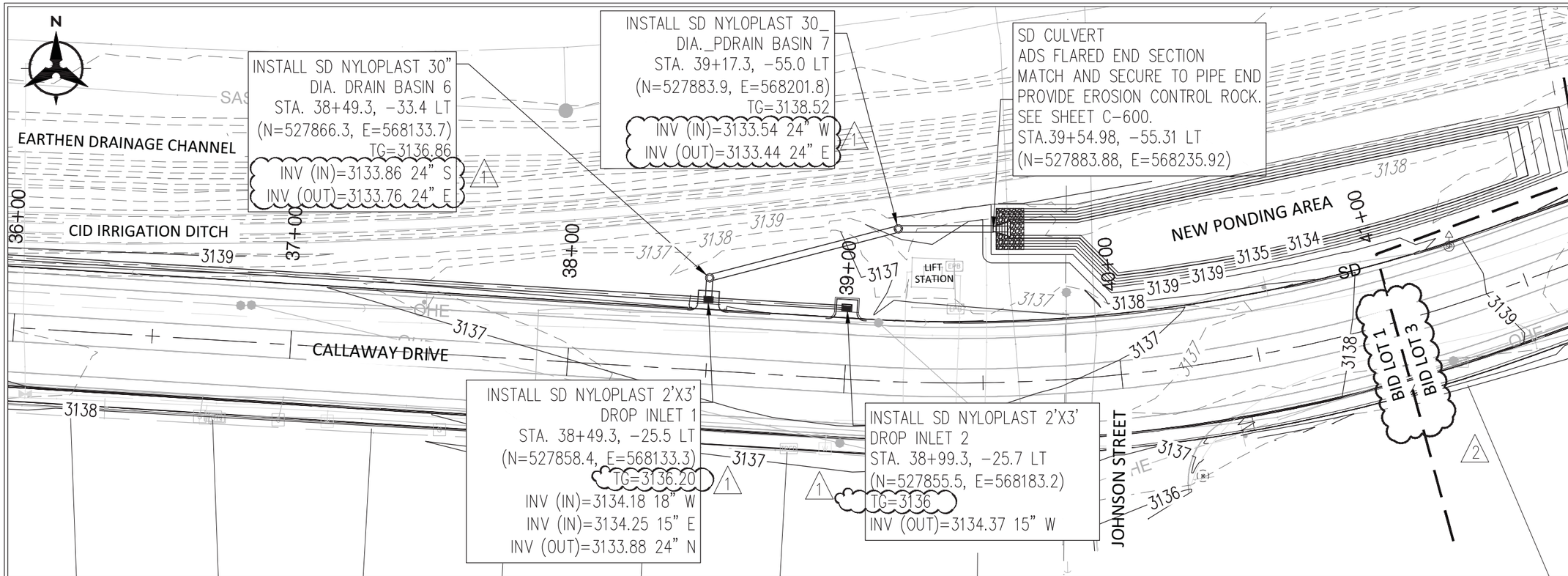

40 20 0 40

1"=40'

PLAN

CALLAWAY DRIVE

PROFILE

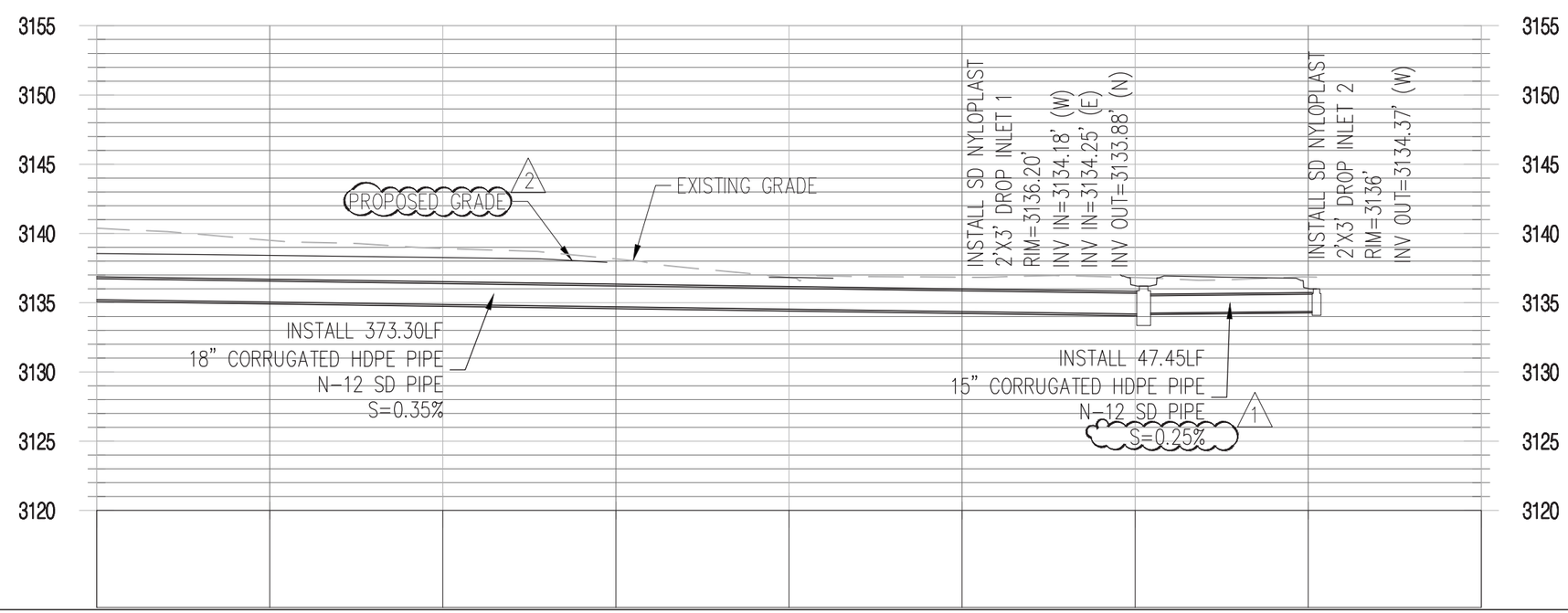

Bohannan Huston

www.b□inc.com

800.877.5□□2

NOTICE OF EXTENDED PAYMENT PROVISION: THIS CONTRACT ALLOWS THE OWNER TO MAKE PAYMENT WITHIN 45 DAYS AFTER SUBMISSION OF AN UNDISPUTED REQUEST FOR PAYMENT

ANDREW G. GUERRA NEW MEXICO 19125 PROFESSIONAL ENGINEER

2-22-16

REV NO.	REV DATE	DESCRIPTION
2	2/22/16	ROADWAY & STORM DRAIN MODIFICATIONS
1	11/13/15	ADDENDUM 1

PROJECT NUMBER: CRS143-12

DESIGNED BY: AG

DRAWN BY: JM

CHECKED BY: AG

PROJECT DATE: OCTOBER 2015

CALLAWAY DRIVE
STORM DRAIN PLAN AND PROFILE

CALLAWAY DRIVE
CITY OF CARLSBAD
CARLSBAD, NEW MEXICO

C-204

SHEET

© COPYRIGHT

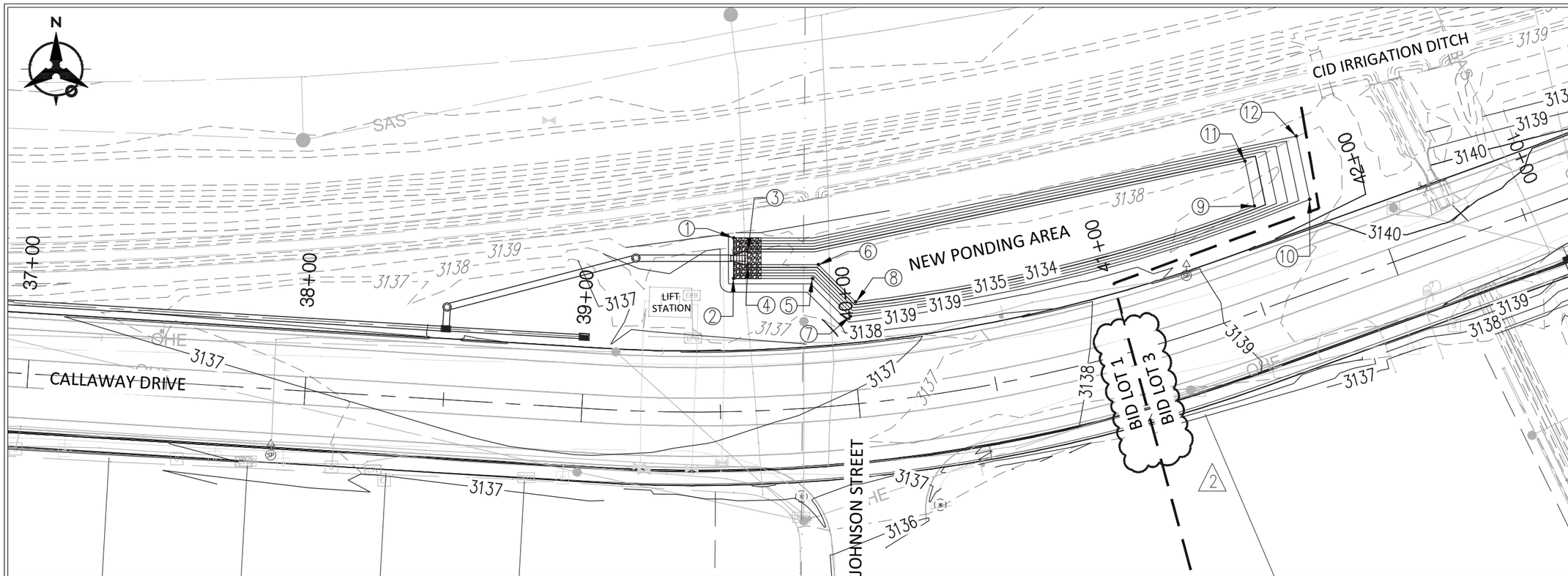

40 20 0 40

1"=40'

PLAN

CALLAWAY DRIVE

2

Point Table

Structure Name	Description	Station & Offset	Northing	Easting	Elevation
1	TOP OF POND	39+56.45, −62.596' LT	527891.19	568237.05	3139.00
2	TOP OF POND	39+56.03, −47.970' LT	527876.56	568237.05	3139.00
3	BOTTOM OF POND	39+61.85, −57.443' LT	527886.19	568242.05	3134.00
4	BOTTOM OF POND	39+61.70, −52.780' LT	527881.53	568242.09	3134.03
5	TOP OF POND	39+86.95, −46.468' LT	527876.55	568265.51	3139.00
6	BOTTOM OF POND	39+89.64, −51.291' LT	527881.56	568267.57	3134.00

2

Point Table

Structure Name	Description	Station & Offset	Northing	Easting	Elevation
7	TOP OF POND	40+00.21, −31.633' LT	527862.90	568279.16	3139.00
8	BOTTOM OF POND	40+02.73, −36.650' LT	527868.13	568281.00	3134.00
9	BOTTOM OF POND	41+59.75, −36.022' LT	527902.70	568424.75	3134.00
10	TOP OF POND	41+79.32, −31.519' LT	527905.12	568444.68	3139.00
11	BOTTOM OF POND	41+62.05, −52.411' LT	527918.90	568421.34	3134.00
12	TOP OF POND	41+82.55, −54.590' LT	527927.91	568439.87	3139.00

2

Bohannan Huston
www.b□inc.com
800.877.5□□2

NOTICE OF EXTENDED PAYMENT PROVISION: THIS CONTRACT ALLOWS THE OWNER TO MAKE PAYMENT WITHIN 45 DAYS AFTER SUBMISSION OF AN UNDISPUTED REQUEST FOR PAYMENT

ANDREW G. GUERRA
NEW MEXICO
19125
PROFESSIONAL ENGINEER
2-22-16

REV NO.	REV DATE	DESCRIPTION
2	2/22/16	ROADWAY & STORM DRAIN MODIFICATIONS
1	11/13/15	ADDENDUM 1

PROJECT NUMBER: CRS143-12
DESIGNED BY: AG
DRAWN BY: JM
CHECKED BY: AG
PROJECT DATE: OCTOBER 2015

CALLAWAY DRIVE
STORM DRAIN PLAN AND PROFILE

CALLAWAY DRIVE
CITY OF CARLSBAD
CARLSBAD, NEW MEXICO

C−205
SHEET

© COPYRIGHT

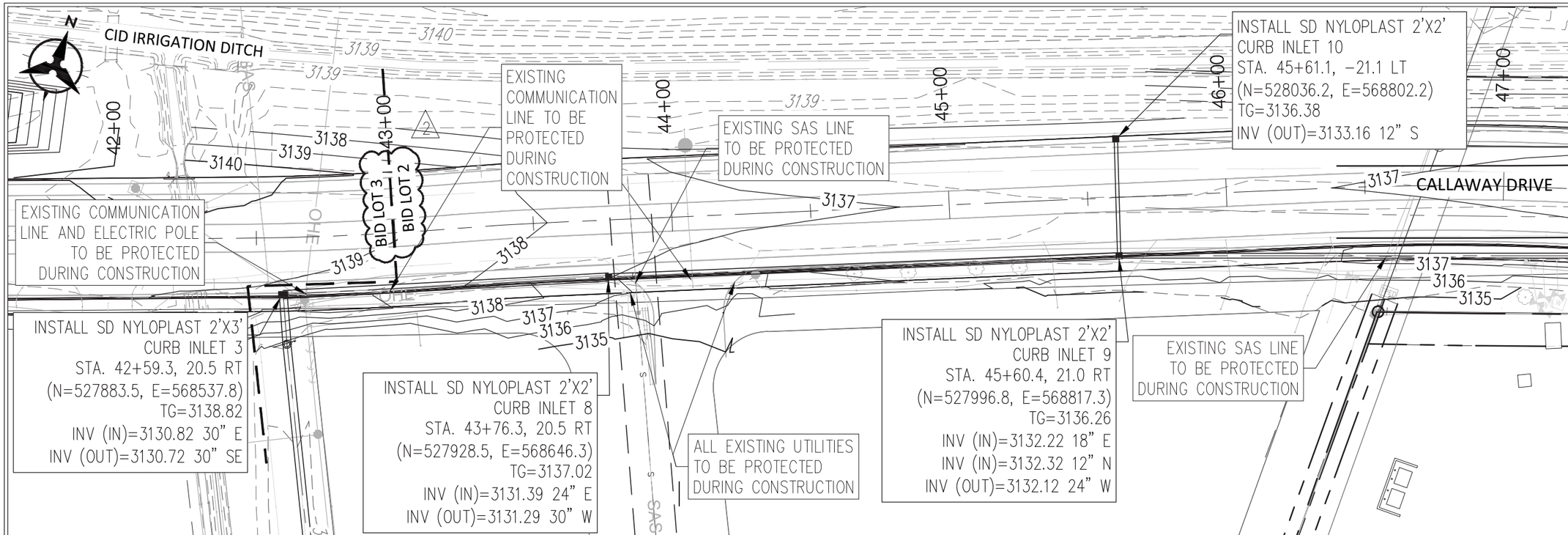

40 20 0 40

1"=40'

PLAN

CALLAWAY DRIVE PROFILE

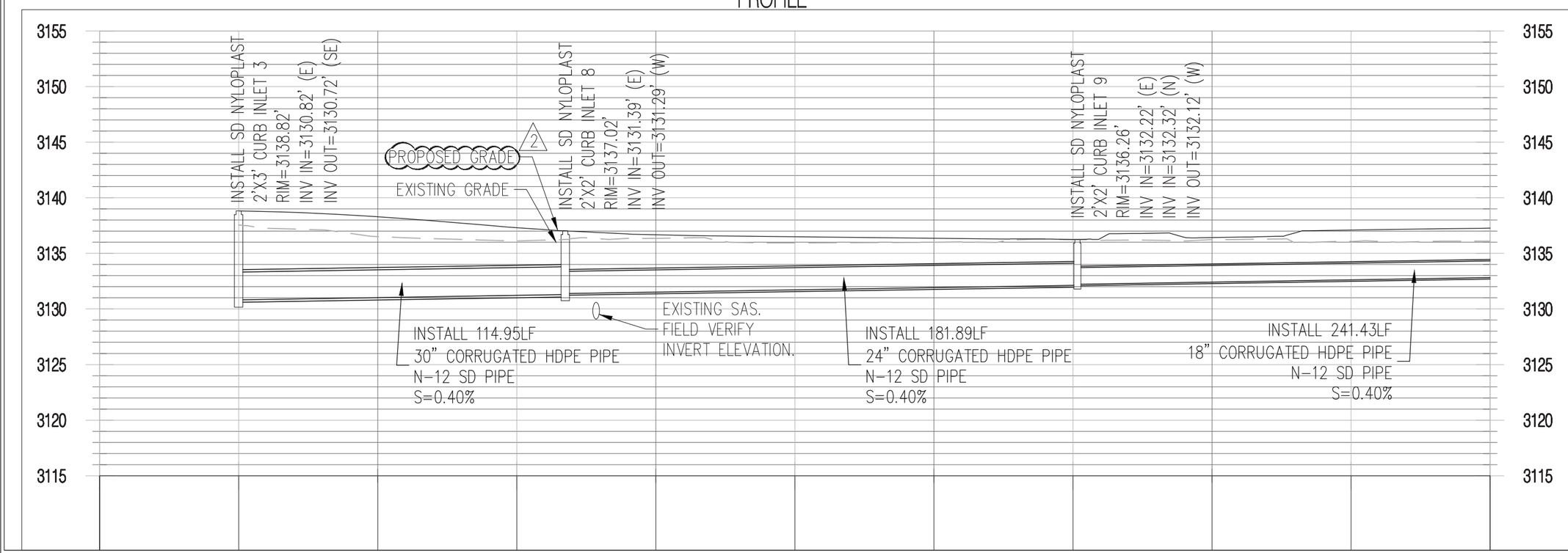

Bohannan Huston

www.b□inc.com

800.877.5□□2

NOTICE OF EXTENDED PAYMENT PROVISION: THIS CONTRACT ALLOWS THE OWNER TO MAKE PAYMENT WITHIN 45 DAYS AFTER SUBMISSION OF AN UNDISPUTED REQUEST FOR PAYMENT

ANDREW G. GUERRA NEW MEXICO 19125 PROFESSIONAL ENGINEER

2-22-16

REV NO.	REV DATE	DESCRIPTION
2	2/22/16	ROADWAY & STORM DRAIN MODIFICATIONS

PROJECT NUMBER: CRS143-12

DESIGNED BY: AG

DRAWN BY: JM

CHECKED BY: AG

PROJECT DATE: OCTOBER 2015

CALLAWAY DRIVE
STORM DRAIN PLAN AND PROFILE

CALLAWAY DRIVE
CITY OF CARLSBAD
CARLSBAD, NEW MEXICO

C-206

SHEET

© COPYRIGHT

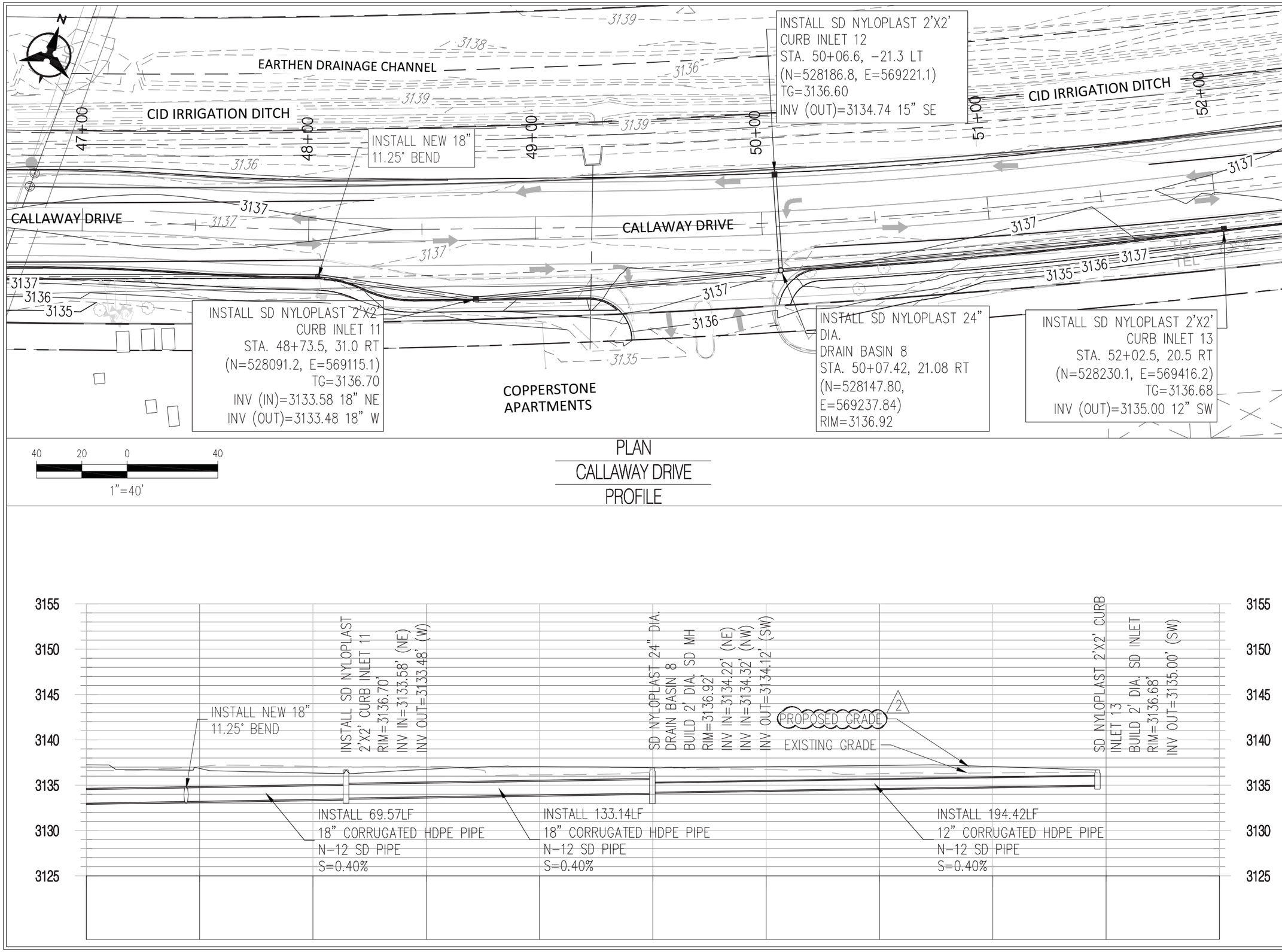

Bohannan Huston
www.b□inc.com
800.877.5□□2

NOTICE OF EXTENDED PAYMENT PROVISION:
THIS CONTRACT ALLOWS THE OWNER TO MAKE PAYMENT WITHIN 45 DAYS AFTER SUBMISSION OF AN UNDISPUTED REQUEST FOR PAYMENT

ANDREW G. GUERRA
NEW MEXICO
19125
PROFESSIONAL ENGINEER
2-22-16

REV NO.	REV DATE	DESCRIPTION
2	2/22/16	ROADWAY & STORM DRAIN MODIFICATIONS

PROJECT NUMBER: CRS143-12
DESIGNED BY: AG
DRAWN BY: JM
CHECKED BY: AG
PROJECT DATE: OCTOBER 2015

CALLAWAY DRIVE
STORM DRAIN PLAN AND PROFILE

CALLAWAY DRIVE
CITY OF CARLSBAD
CARLSBAD, NEW MEXICO

C-207
SHEET

© COPYRIGHT

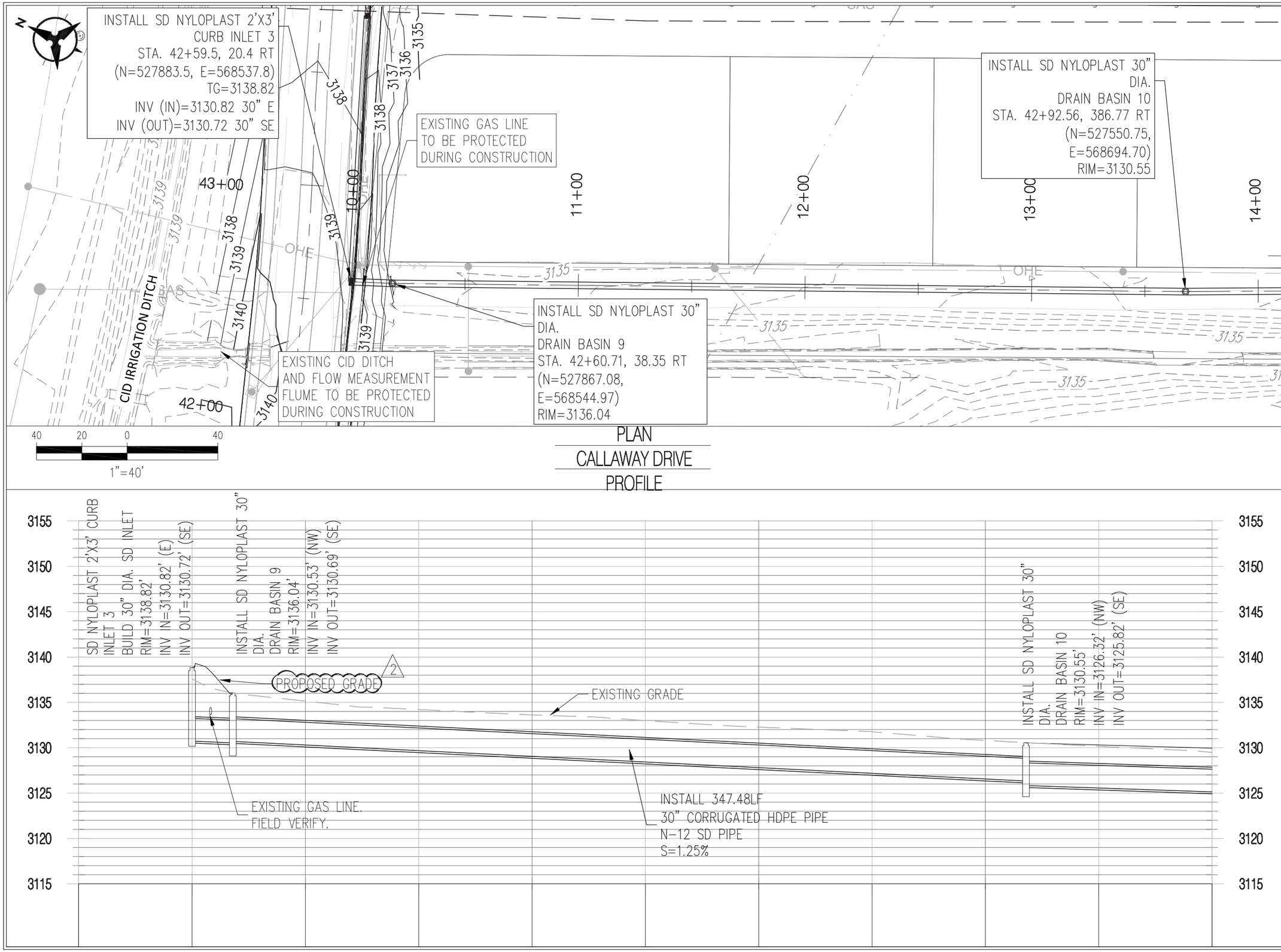

PLAN

CALLAWAY DRIVE

PROFILE

Bohannan Huston

www.b□inc.com

800.877.5□□2

NOTICE OF EXTENDED PAYMENT PROVISION: THIS CONTRACT ALLOWS THE OWNER TO MAKE PAYMENT WITHIN 45 DAYS AFTER SUBMISSION OF AN UNDISPUTED REQUEST FOR PAYMENT

ANDREW G. GUERRA
NEW MEXICO
19125
PROFESSIONAL ENGINEER
2-22-16

REV NO.	REV DATE	DESCRIPTION
2	2/22/16	ROADWAY & STORM DRAIN MODIFICATIONS

PROJECT NUMBER: CRS143-12
DESIGNED BY: AG
DRAWN BY: JM
CHECKED BY: AG
PROJECT DATE: OCTOBER 2015

CALLAWAY DRIVE
STORM DRAIN PLAN AND PROFILE

CALLAWAY DRIVE
CITY OF CARLSBAD
CARLSBAD, NEW MEXICO

C-208

SHEET

© COPYRIGHT

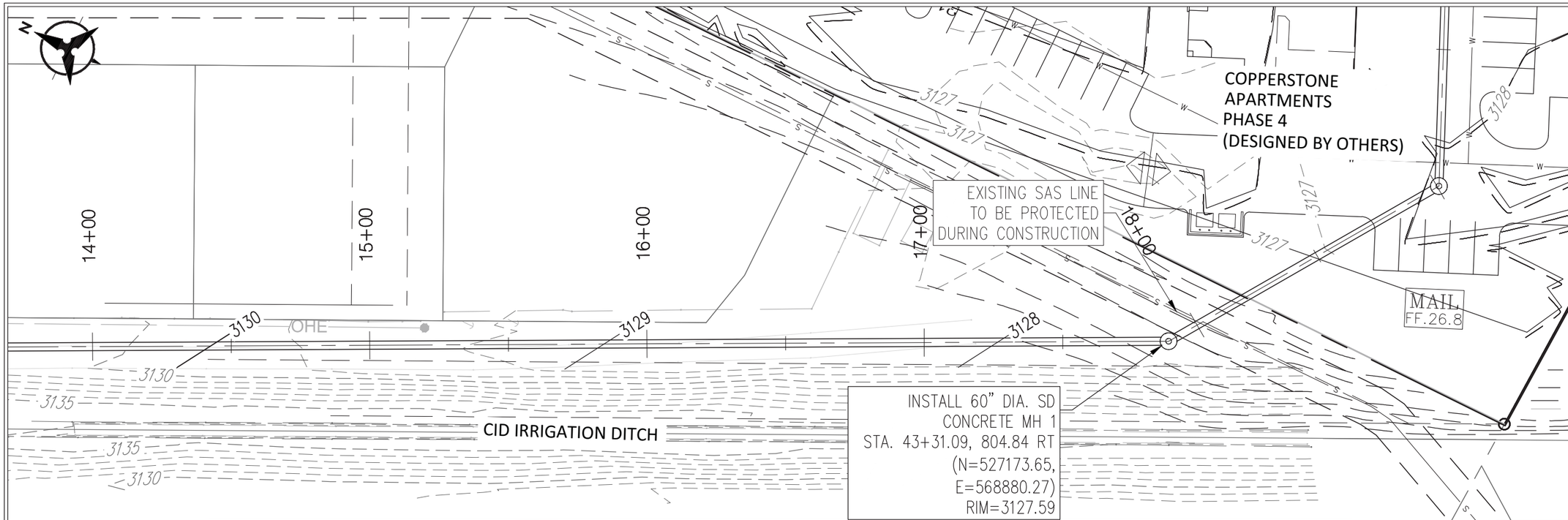

40 20 0 40

1"=40'

PLAN
CD IRRIGATION LATERAL
PROFILE

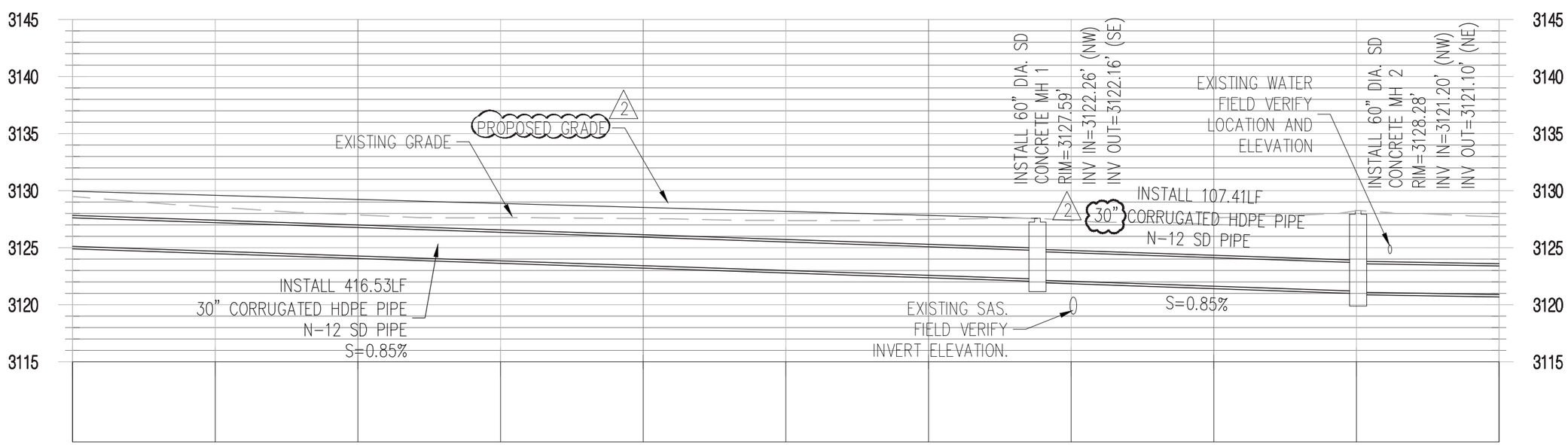

Bohannan Huston

www.b□inc.com
800.877.5□□2

NOTICE OF EXTENDED PAYMENT PROVISION:
THIS CONTRACT ALLOWS THE OWNER TO MAKE PAYMENT WITHIN 45 DAYS AFTER SUBMISSION OF AN UNDISPUTED REQUEST FOR PAYMENT

ANDREW G. GUERRA
NEW MEXICO
19125
PROFESSIONAL ENGINEER
2-22-16

REV NO.	REV DATE	DESCRIPTION
2	2/22/16	ROADWAY & STORM DRAIN MODIFICATIONS

PROJECT NUMBER: CRS143-12
DESIGNED BY: AG
DRAWN BY: JM
CHECKED BY: AG
PROJECT DATE: OCTOBER 2015

CALLAWAY DRIVE
STORM DRAIN PLAN AND PROFILE

CALLAWAY DRIVE
CITY OF CARLSBAD
CARLSBAD, NEW MEXICO

C-209
SHEET

© COPYRIGHT

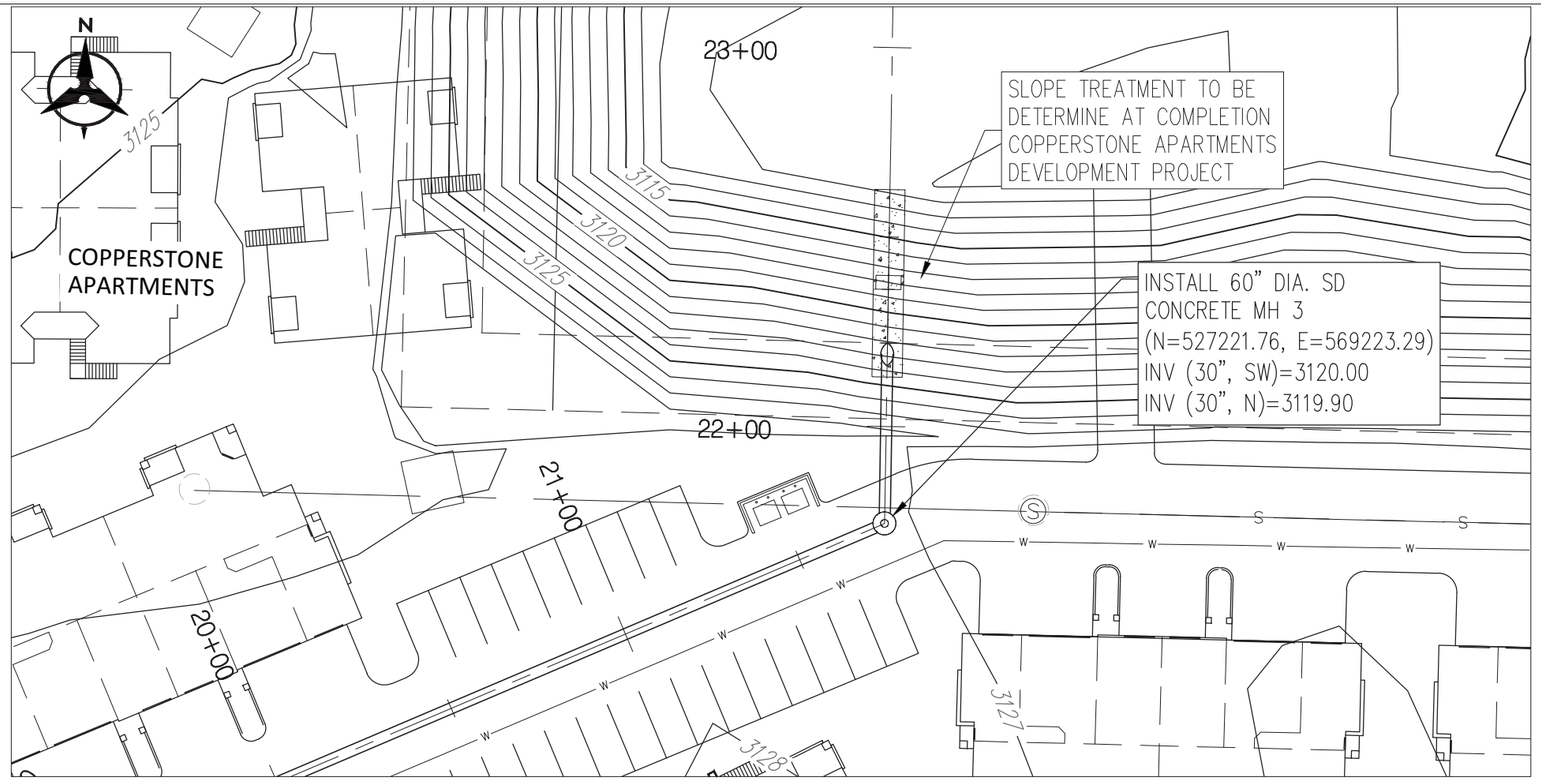

40 20 0 40

1"=40'

PLAN

COPPERSTONE APARTMENTS

PROFILE

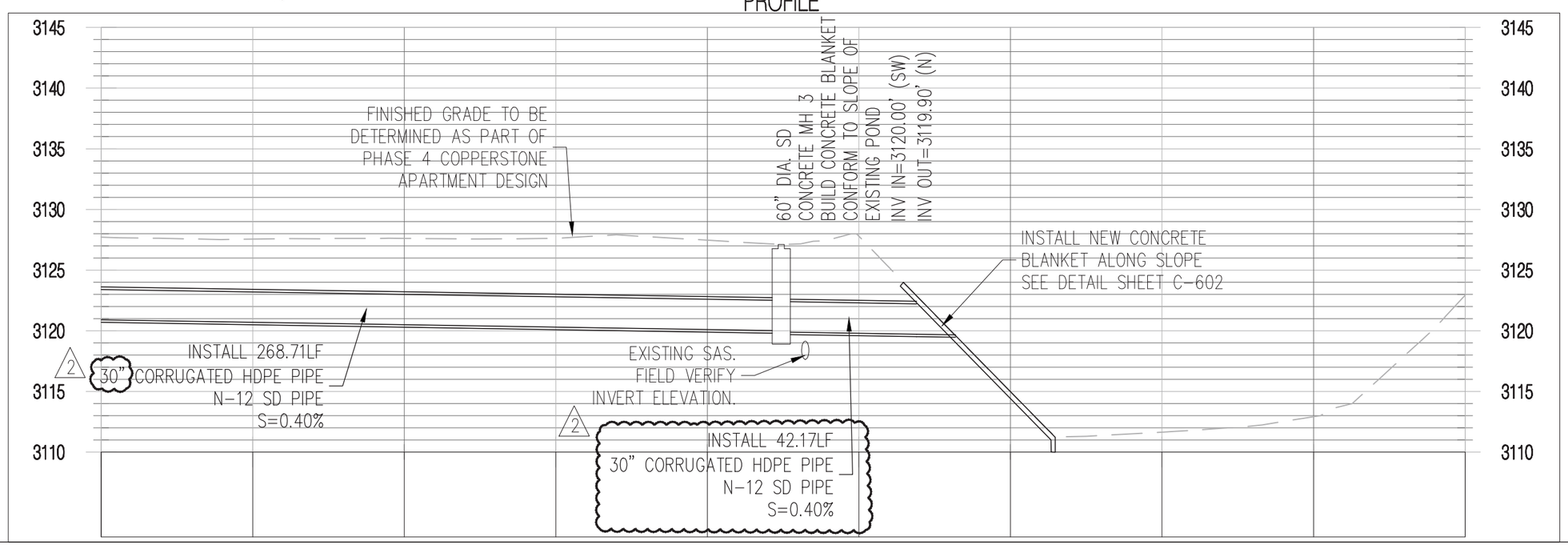

Bohannan Huston

www.b□inc.com

800.877.5□□2

NOTICE OF EXTENDED PAYMENT PROVISION: THIS CONTRACT ALLOWS THE OWNER TO MAKE PAYMENT WITHIN 45 DAYS AFTER SUBMISSION OF AN UNDISPUTED REQUEST FOR PAYMENT

ANDREW G. GUERRA NEW MEXICO 19125 PROFESSIONAL ENGINEER

2-22-16

REV NO.	REV DATE	DESCRIPTION
2	2/22/16	ROADWAY & STORM DRAIN MODIFICATIONS

PROJECT NUMBER: CRS143-12

DESIGNED BY: AG

DRAWN BY: JM

CHECKED BY: AG

PROJECT DATE: OCTOBER 2015

CALLAWAY DRIVE
STORM DRAIN PLAN AND PROFILE

CALLAWAY DRIVE
CITY OF CARLSBAD
CARLSBAD, NEW MEXICO

C-210

SHEET

© COPYRIGHT

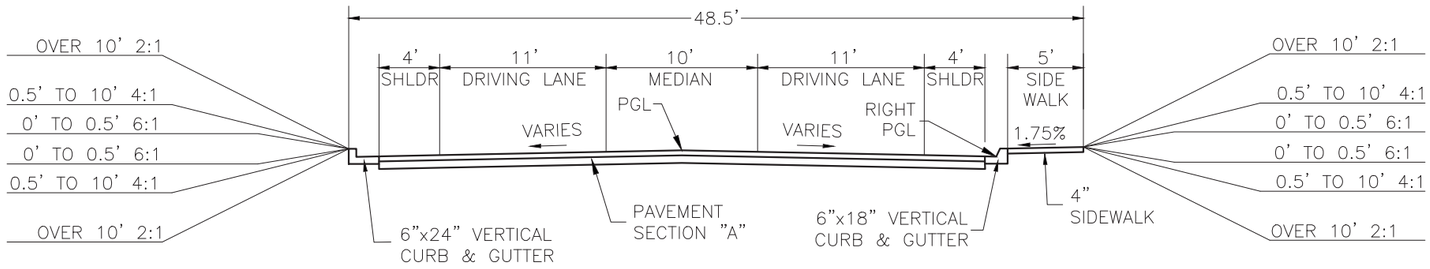

PROPOSED TYPICAL SECTION A
CALLAWAY DRIVE
STA. 10+00 TO STA. 22+00
STA. 35+00 TO STA. 53+85

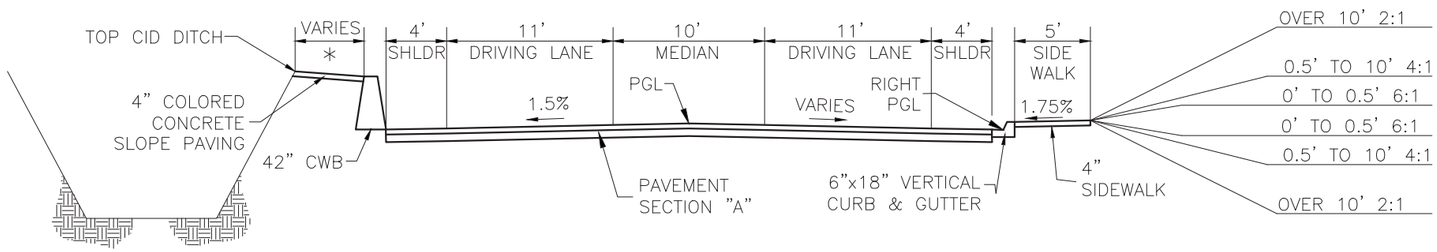

* CONTRACTOR TO INSTALL SKATE DETERRENTS AT 50' INTERVALS. INCIDENTAL TO SLOPE PAVING. CONTRACTOR TO SUBMIT CONCRETE COLOR SAMPLES FOR OWNER APPROVAL

PROPOSED TYPICAL SECTION B
CALLAWAY DRIVE
STA. 22+00 TO STA. 35+00

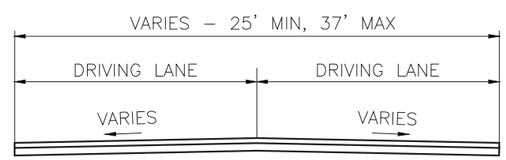

EXISTING TYPICAL SECTION
CALLAWAY DRIVE

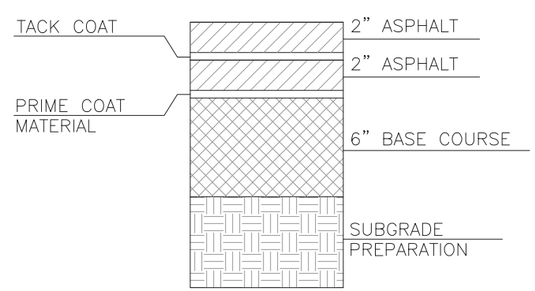

PROPOSED PAVEMENT SECTION "A"

MOLZENCORBIN
1155 Commerce Dr., Suite F
Las Cruces, New Mexico 88011
575 522 0049 office
575 522 7884 fax
MolzenCorbin.com

WYATT D. KARTCHNER
NEW MEXICO
20843
2/23/16
REGISTERED PROFESSIONAL ENGINEER

REV NO	REV DATE	DESCRIPTION
1	2/23/16	ROAD AND DRAIN REVISIONS

PROJECT NUMBER: CRS133-12
DESIGNED BY: WDK
DRAWN BY: EG
CHECKED BY: JTM
PROJ ENGINEER: WDK
PROJECT DATE: OCTOBER 2015

CALLAWAY DRIVE
TYPICAL SECTIONS

CALLAWAY DRIVE
CITY OF CARLSBAD
CARLSBAD, NEW MEXICO

C-401
SHEET

i:\CARLSBAD\CRS133-12-Callaway Design\DWG\CCA133-401.dwg

© COPYRIGHT

PEDESTRIAN ACCESS RAMP NOTES:

1. PEDESTRIAN ACCESS RAMPS (PA RAMP(S)) SHALL COMPLY WITH CURRENT PUBLIC RIGHT–OF–WAY ACCESS GUIDELINES (PROWAG).
2. DETECTABLE WARNING SURFACES (DWS) SHALL BE INSTALLED ON ALL PA RAMPS.
3. DWS SHALL BE LOCATED NO LESS THAN 8 INCHES AND NO GREATER THAN 10 INCHES FROM THE BACK OF CURB.
4. IF THE TOTAL VERTICAL RISE IN ELEVATION (6 INCHES) IS NOT ACHIEVED WITHIN THE 10–FT PA RAMP SHOWN, THEN THE REMAINING PA RAMP ELEVATION SHALL BE COMPLETED WITHIN A 5–FT x 5–FT LANDING WITH SLOPE NOT TO EXCEED 15:1.
5. SIDEWALKS AND PA RAMPS SHALL BE LOCATED AS SPECIFIED ON THE PLANS, OR AS DIRECTED BY THE ENGINEER.
6. SLOPE OF PA RAMP PLATFORM NOT TO EXCEED 1.75%. 2% MAXIMUM CROSS SLOPE ON THE RAMP OR PEDESTRIAN ACCESS ROUTE.
7. THE TOP OF THE JOINT FILLER FOR ALL PA RAMP TYPES SHALL BE FLUSH WITH THE ADJACENT CONCRETE.
8. PROVIDE DWS COLOR THAT CONTRAST VISUALLY WITH ADJACENT WALKWAY SURFACES, EITHER LIGHT ON DARK OR DARK ON LIGHT FOR THE FULL WIDTH OF THE RAMP.
9. THE LEAST POSSIBLE PA RAMP SLOPE SHALL BE USED FOR COMPLIANCE. PA RAMP SLOPE SHALL NOT BE LESS THAN 15:1. WHERE EXISTING TERRAIN IS STEEP, PA RAMPS NEED NOT EXCEED 15–FT IN LENGTH.
10. PA RAMP LANDINGS SHALL BE A MINIMUM OF 60 INCHES x 60 INCHES UNLESS OTHERWISE DIRECTED BY THE ENGINEER. THE LONGITUDINAL SLOPE OF PA RAMPS SHALL NOT EXCEED 2%, AND SHALL BE PARALLEL TO THE DESIRED STREET CROSSING PATH.
11. HEADER CURB CONSTRUCTED AS PART OF A PA RAMP SHALL BE MEASURED IN PLAN AREA SQUARE YARDS AND PAID UNDER THE ITEM 608004 – CONCRETE SIDEWALK 4".
12. INSTALLATION OF DWS SHALL BE INCIDENTAL TO ITEM 608004, CONCRETE SIDEWALK 4". DWS SHALL BE INSET INTO CONCRETE.
13. CONSTRUCTION OF PEDESTRIAN ACCESS RAMPS: SEE "NOTE TO CONTRACTOR", THIS SHEET FOR INFORMATION REGARDING THE CONSTRUCTION OF CONCRETE CURB & ADA/PEDESTRIAN ACCESS RAMP INSTALLATIONS.

NOTE TO CONTRACTOR – CONCRETE CURB, SIDEWALK & ADA/PEDESTRIAN RAMP INSTALLATIONS:
ELEVATIONS SHOWN ARE APPROXIMATE AND ARE TO BE USED ONLY AS A GUIDE FOR ESTABLISHMENT OF NEW CONCRETE HEADER CURB, CURB & GUTTER, PEDESTRIAN RAMPS, AND CONCRETE SIDEWALKS. CONTRACTOR SHALL NOT POUR CONCRETE FOR CURBING, ADA/PEDESTRIAN RAMPS, AND SIDEWALKS UNTIL REVIEWED AND APPROVED BY THE PROJECT MANAGER.

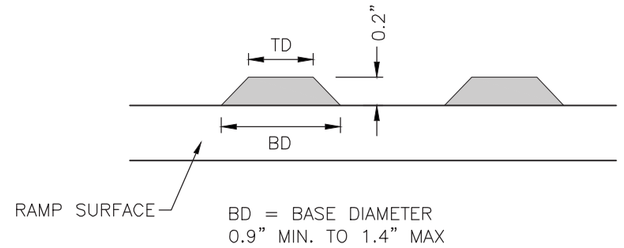

DOME SECTION

NOT–TO–SCALE

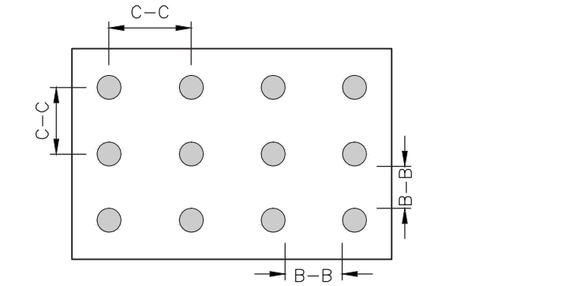

DOME SPACING

NOT–TO–SCALE

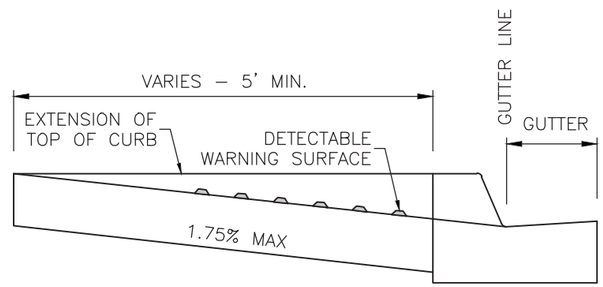

DOME LOCATION

NOT–TO–SCALE

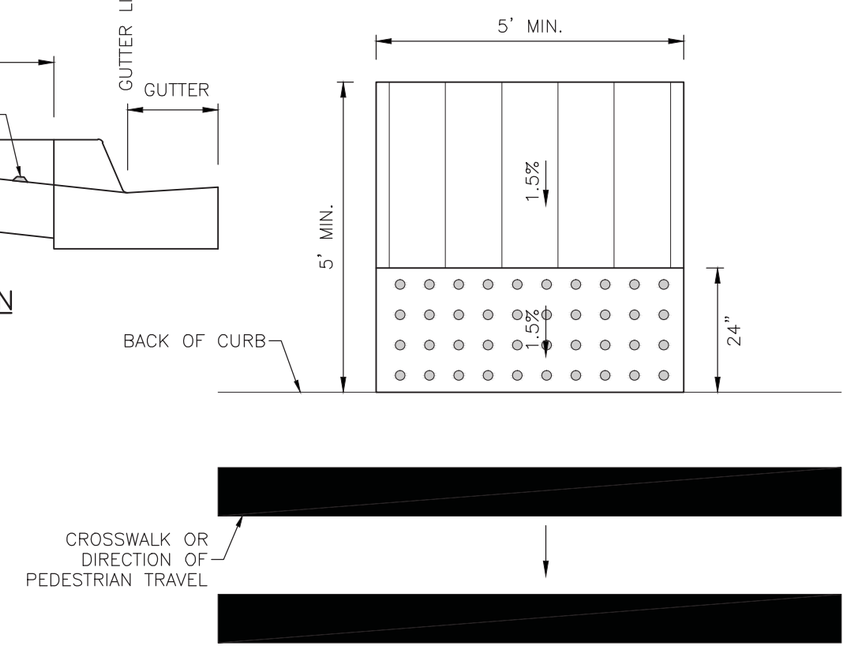

NOTES:

1. DETECTABLE WARNING SURFACE SHALL EXTEND 24" MIN IN THE DIRECTION OF CROSSING PATH, FOR THE FULL WIDTH OF THE CURB RAMP, LANDING OR TRANSITION.
2. DOMES SHALL BE ALIGNED ON A SQUARE GRID IN THE PREDOMINANT DIRECTION OF THE CROSSWALK TO PERMIT WHEELS TO ROLL BETWEEN THEM.
3. DOMES AND SLOPE OF LANDING PAD ALIGNED PARALLEL TO THE DIRECTION OF THE CROSSING PATH.

DOME ALIGNMENT

NOT–TO–SCALE

MOLZENCORBIN
1155 Commerce Dr., Suite F
Las Cruces, New Mexico 88011
575 522 0049 office
575 522 7884 fax
MolzenCorbin.com

WYATT D. KARTCHNER
NEW MEXICO
20843
10/15/15
REGISTERED PROFESSIONAL ENGINEER

REV NO	REV DATE	DESCRIPTION

PROJECT NUMBER:	CRS133–12
DESIGNED BY:	WDK
DRAWN BY:	EG
CHECKED BY:	JTM
PROJ ENGINEER:	WDK
PROJECT DATE:	OCTOBER 2015

ADA NOTES AND DETAILS

CALLAWAY DRIVE
CITY OF CARLSBAD
CARLSBAD, NEW MEXICO

C-500

SHEET

© COPYRIGHT

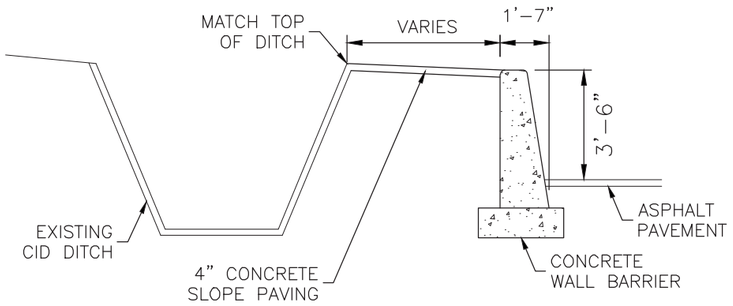

42" CONCRETE WALL BARRIER

N.T.S.

NOTE: PLACE HYDRANTS AS SHOWN ON PLANS OR AS DIRECTED BY THE ENGINEER

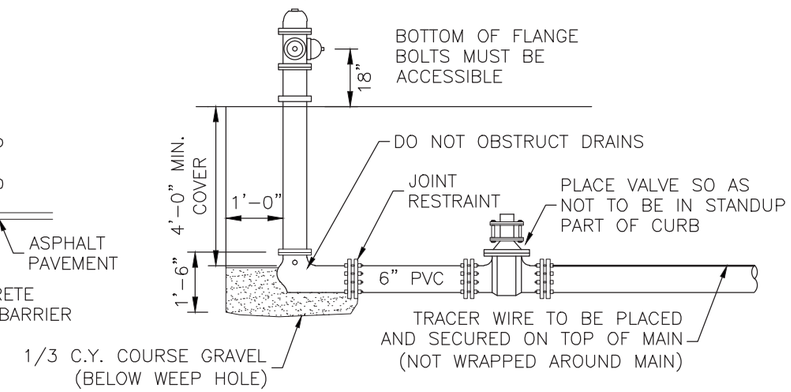

FIRE HYDRANT INSTALLATION

N.T.S.

POST TYPE	POST SIZE	MAX. CLEAR HEIGHT, H (FT.)	MAX. SIGN AREA (SQ. FT.)
SQUARE TUBING	1.75"x1.75" (12 GA.)	9	5
SQUARE TUBING	1.75"x1.75" (12 GA.)	8	6
SQUARE TUBING	1.75"x1.75" (12 GA.)	7	7
SQUARE TUBING	2.00"x2.00" (12 GA.)	9	8
SQUARE TUBING	2.00"x2.00" (12 GA.)	8	9
SQUARE TUBING	2.00"x2.00" (12 GA.)	7	10
SQUARE TUBING	2.25"x2.25" (12 GA.)	9	10.5
SQUARE TUBING	2.25"x2.25" (12 GA.)	10	10.5

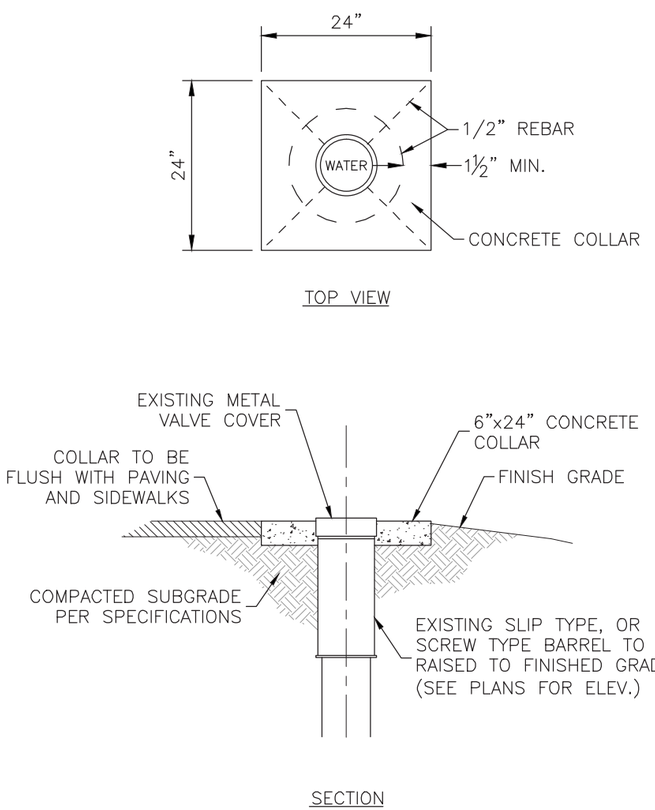

TYPICAL VALVE ADJUSTMENT DETAIL

N.T.S.

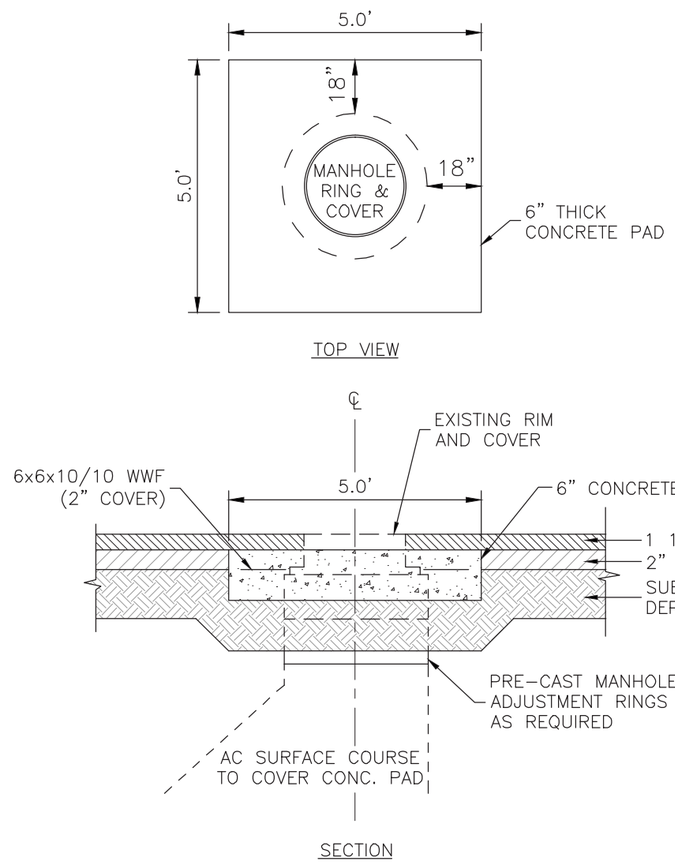

MANHOLE ADJUSTMENT DETAIL

N.T.S.

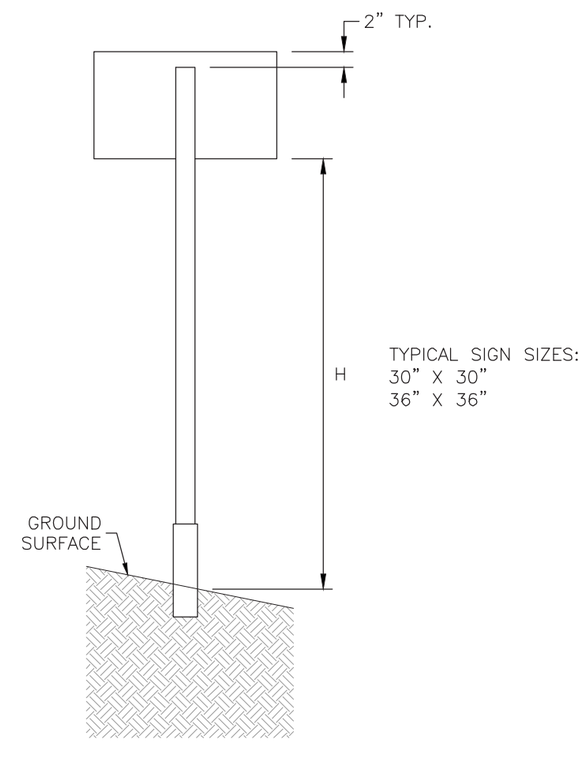

STANDARD SIGN-SINGLE POST DETAIL

N.T.S.

MOLZENCORBIN
1155 Commerce Dr., Suite F
Las Cruces, New Mexico 88011
575 522 0049 office
575 522 7884 fax
MolzenCorbin.com

WYATT D. KARTCHNER
NEW MEXICO
20843
REGISTERED PROFESSIONAL ENGINEER
10/15/15

REV NO	REV DATE	DESCRIPTION

PROJECT NUMBER: CRS133-12
DESIGNED BY: WDK
DRAWN BY: EG
CHECKED BY: JTM
PROJ ENGINEER: WDK
PROJECT DATE: OCTOBER 2015

STANDARD DETAILS

CALLAWAY DRIVE
CITY OF CARLSBAD
CARLSBAD, NEW MEXICO

C-501

SHEET

© COPYRIGHT

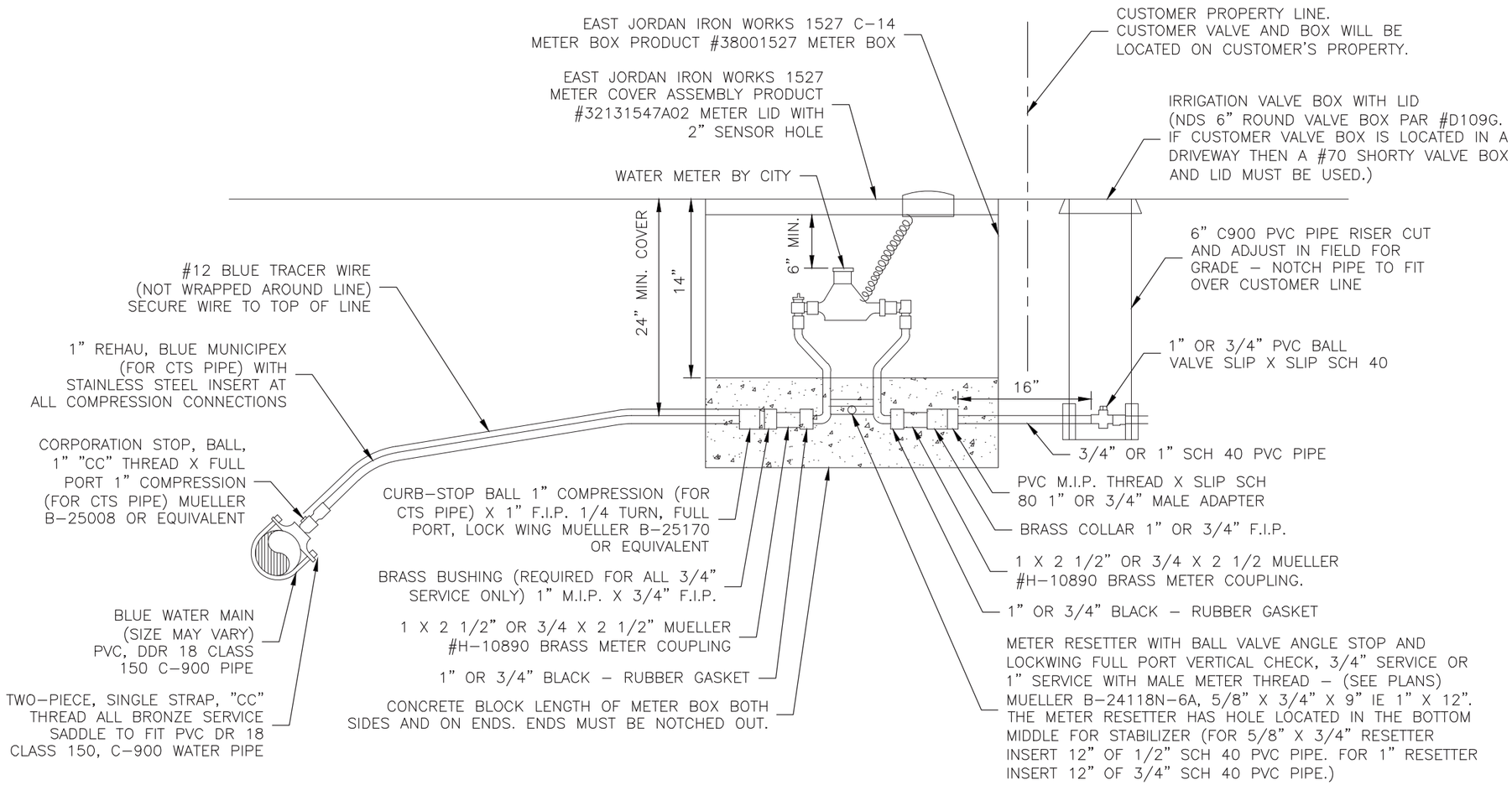

NOTES:

1. ANY DEVIATION OF COMPONENT MODELS SHOWN SHALL BE APPROVED BY THE ENGINEER AND THE CITY OF CARLSBAD.
2. NEW WATER SERVICES TO BE INSTALLED 5'-0" FROM SIDE LOT LINE UNLESS OTHERWISE SHOWN IN THESE PLANS.
3. SERVICE LINE SHALL BE ONE CONTINUOUS PIPE. NO SPLICES WILL BE ACCEPTED. LINE SHALL BE 24" MINIMUM BURIAL.
4. ALL BRASS FITTINGS MUST BE NO LEAD/LOW LEAD.
5. ALL COMPRESSION CONNECTIONS SHALL BE MUELLER 1110 CONDUCIVE COMPRESSION CONNECTION TYPE.
6. EQUIVALENT PARTS AND MATERIALS MAY BE USED IF APPROVED BY THE CITY OF CARLSBAD.

TYPICAL (3/4" TO 1") WATER SERVICE LATERAL

N.T.S.

MOLZENCORBIN
1155 Commerce Dr., Suite F
Las Cruces, New Mexico 88011
575 522 0049 office
575 522 7884 fax
MolzenCorbin.com

WYATT D. KARTCHNER
NEW MEXICO
20843
10/15/15
REGISTERED PROFESSIONAL ENGINEER

REV NO	REV DATE	DESCRIPTION

PROJECT NUMBER:	CRS133-12
DESIGNED BY:	WDK
DRAWN BY:	EG
CHECKED BY:	JTM
PROJ ENGINEER:	WDK
PROJECT DATE:	OCTOBER 2015

STANDARD DETAILS

CALLAWAY DRIVE
CITY OF CARLSBAD
CARLSBAD, NEW MEXICO

C-502

SHEET

© COPYRIGHT

Station	Description	Left Outside Lane	Right Outside Lane
10+00.00'	Begin Alignment	-2.00%	-2.00%
9+73.90'	End Normal Shoulder	-2.00%	-2.00%
9+73.90'	End Normal Crown	-2.00%	-2.00%
10+10.37'	Level Crown	-2.00%	0.00%
10+46.84'	Reverse Crown	-2.00%	2.00%
10+72.37'	Begin Full Super	-3.40%	3.40%
10+90.64'	End Full Super	-3.40%	3.40%
11+16.17'	Reverse Crown	-2.00%	2.00%
11+52.64'	Level Crown	-2.00%	0.00%
11+89.11'	Begin Normal Crown	-2.00%	-2.00%
11+89.11'	Begin Normal Shoulder	-2.00%	-2.00%
12+50.00'	Manual station	-2.00%	0.00%
13+00.00'	Manual station	-2.00%	2.00%
18+44.96'	End Normal Shoulder	-2.00%	2.00%
18+44.96'	End Normal Crown	-2.00%	2.00%
18+81.07'	Level Crown	-2.00%	2.00%
19+17.19'	Reverse Crown	-2.00%	2.00%
19+46.07'	Begin Full Super	-2.00%	2.00%
19+64.70'	End Full Super	-2.00%	2.00%
20+71.52'	End Full Super	-1.50%	1.50%
21+02.84'	Begin Full Super	-1.50%	1.50%
21+33.52'	Level Crown	-1.50%	1.50%
21+69.99'	Begin Normal Crown	-1.50%	1.50%

Station	Description	Left Outside Lane	Right Outside Lane
21+69.99'	Begin Normal Shoulder	-1.50%	1.50%
38+25.50'	End Normal Shoulder	-1.50%	1.50%
38+25.50'	End Normal Crown	-1.50%	1.50%
38+61.61'	Level Crown	-1.50%	1.50%
38+97.72'	Reverse Crown	-1.50%	1.50%
39+26.61'	Begin Full Super	-1.50%	1.50%
41+21.09'	End Full Super	-0.50%	0.50%
41+49.98'	Reverse Crown	1.00%	-1.00%
41+86.09'	Level Crown	2.00%	-2.50%
42+22.20'	Begin Normal Crown	3.90%	-3.90%
42+22.20'	Begin Normal Shoulder	3.90%	-3.90%
43+50.00'	Manual station	-2.00%	-3.00%
48+75.19'	End Normal Shoulder	-2.00%	-2.00%
48+75.19'	End Normal Crown	-2.00%	-2.00%
49+11.19'	Level Crown	-2.00%	0.00%
49+47.19'	Begin Full Super	-2.00%	2.00%
49+47.19'	Reverse Crown	-2.00%	2.00%
51+29.74'	End Full Super	-2.00%	2.00%
51+29.74'	Reverse Crown	-2.00%	2.00%
51+65.74'	Level Crown	-2.00%	0.00%
52+01.74'	Begin Normal Crown	-2.00%	-2.00%
52+01.74'	Begin Normal Shoulder	-2.00%	-2.00%
54+45.48'	End Alignment	-2.00%	-2.00%

MOLZENCORBIN
1155 Commerce Dr., Suite F
Las Cruces, New Mexico 88011
575 522 0049 office
575 522 7884 fax
MolzenCorbin.com

WYATT D. KARTCHNER
NEW MEXICO
20843
2/23/16
REGISTERED PROFESSIONAL ENGINEER

REV NO	REV DATE	DESCRIPTION
1	2/23/16	ROAD AND DRAIN REVISIONS

PROJECT NUMBER: CRS133-12
DESIGNED BY: WDK
DRAWN BY: EG
CHECKED BY: JTM
PROJ ENGINEER: WDK
PROJECT DATE: OCTOBER 2015

SUPERELEVATION TABLE

CALLAWAY DRIVE
CITY OF CARLSBAD
CARLSBAD, NEW MEXICO

C-503
SHEET

© COPYRIGHT

I:\CARLSBAD\CRS133-12-Callaway Design\DWG\CCA133-501-505.dwg

TRAFFIC CONTROL GENERAL NOTES:

1. DRIVEWAY ACCESS:
THE CONTRACTOR SHALL PROVIDE INGRESS AND EGRESS TO LOCAL BUSINESSES AND RESIDENCES FOR THE DURATION OF THE PROJECT. IF ACCESS CLOSURES TO LOCAL BUSINESSES OR RESIDENCES ARE REQUIRED, THE CONTRACTOR SHALL REQUEST THE CLOSURES THROUGH THE PROJECT MANAGER. UPON APPROVAL, THE CONTRACTOR SHALL COORDINATE SUCH CLOSURES WITH THE PROPERTY OWNERS AND THE PROJECT MANAGER AT LEAST 24 HOURS IN ADVANCE.

2. NIGHT TIME WORK:
ADDITIONAL EQUIPMENT REQUIRED FOR ANY APPROVED NIGHT TIME WORK SHALL BE CONSIDERED INCIDENTAL TO CONSTRUCTION.

3. TRAFFIC CONTROL PLAN CHANGES:
THE PROJECT MANAGER SHALL BE NOTIFIED 48 HOURS PRIOR TO ANY TRAFFIC CONTROL CHANGES NEEDED BY THE CONTRACTOR, THAT WERE NOT PREVIOUSLY APPROVED. THESE TRAFFIC CONTROL CHANGES SHALL BE REQUESTED IN WRITING ACCOMPANIED WITH A TRAFFIC CONTROL PLAN REFLECTING SUCH CHANGES.

NO PAYMENT WILL BE MADE FOR ANY ADDITIONAL COSTS RESULTING FROM APPROVED TRAFFIC CONTROL PLAN CHANGES REQUESTED BY CONTRACTOR.

4. TRAFFIC CONTROL DEVICES:
ALL CONSTRUCTION TRAFFIC CONTROL DEVICES SHALL COMPLY TO THE MANUAL ON UNIFORM TRAFFIC CONTROL DEVICES (MUTCD), LATEST EDITION. IT IS THE RESPONSIBILITY OF THE CONTRACTOR TO INSTALL, SERVICE AND MAINTAIN ALL TRAFFIC CONTROL DEVICES.

TRAFFIC CONTROL DEVICES SHALL NOT BE REMOVED OR ALTERED IN ANY WAY WITHOUT THE APPROVAL OF THE PROJECT MANAGER, PER SECTION 6A-4 OF THE MUTCD, LATEST EDITION.

ALL TRAFFIC CONTROL DEVICES SHALL BE KEPT IN NEW-CLEAN CONDITION, WASHING OF EQUIPMENT IS INCIDENTAL TO ITS PLACEMENT AND MAINTENANCE.

5. TRAFFIC CONTROL INITIAL SET-UP:
THE CONSTRUCTION TRAFFIC CONTROL INITIAL SET-UP SHALL BE BY AN AMERICAN TRAFFIC SAFETY SERVICES ASSOCIATION (ATSSA) CERTIFIED WORKSITE TRAFFIC SUPERVISOR. THE MAINTENANCE AND SERVICING SHALL ALSO BE DONE BY AN ATSSA CERTIFIED WORKSITE TRAFFIC SUPERVISOR OR EQUIVALENT.

THE CONTRACTOR IS RESPONSIBLE FOR MAINTAINING AND SERVICING ALL TRAFFIC CONTROL DEVICES, SIGNS AND ANY OTHER PERTINENT TRAFFIC CONTROL EQUIPMENT 24 HOURS A DAY, 7 DAYS A WEEK THROUGHOUT THE DURATION OF THE PROJECT.

6. CLEAR ZONE STORAGE:
EQUIPMENT OR MATERIAL SHALL NOT BE STORED WITHIN 15 FEET OF A TRAVELED TRAFFIC LANE DURING NON-WORKING HOURS WITHOUT THE APPROVAL OF THE PROJECT MANAGER.

7. SIGNS REFLECTIVITY:
ALL TRAFFIC CONTROL SIGNS SHALL MEET THE MINIMUM REFLECTIVE INTENSITY REQUIREMENTS SET FORTH BY THE CITY OF CARLSBAD AND/OR THE NEW MEXICO DEPARTMENT OF TRANSPORTATION (NMDOT). THE PROJECT MANAGER SHALL DETERMINE ALL REQUIREMENTS AND APPROVE OR DISAPPROVE ANY ADVANCE WARNING SIGN PER SECTION 6A-4 OF THE MUTCD, LATEST EDITION.

8. ACCESS SIGNS:
THE CONTRACTOR SHALL MAINTAIN ACCESS TO ALL FACILITIES, BUSINESS AND/OR RESIDENTS AT ALL TIMES.

9. PUBLIC NOTIFICATION:
48 HOURS PRIOR TO OCCUPYING OR CLOSING OF A RIGHT-OF-WAY, THE CONTRACTOR SHALL NOTIFY: THE CITY OF CARLSBAD PUBLIC INFORMATION OFFICER (PIO), POLICE, FIRE DEPARTMENT, SCHOOLS, HOSPITALS, TRANSIT AUTHORITY, BUSINESSES AND/OR RESIDENTS THAT WILL BE AFFECTED BY THE CONSTRUCTION.

10. EXCAVATION WORK:
EXCAVATIONS SHALL BE PLATED, TEMPORARILY PATCHED OR RESURFACED PRIOR TO OPENING OF TRAFFIC, A MINIMUM OF 11 FEET SHALL BE PROVIDED FOR TRAFFIC IN ANY GIVEN DIRECTION. THE CONTRACTOR IS RESPONSIBLE FOR ANY WORK INVOLVED IN SATISFYING THESE REQUIREMENTS. THIS WORK SHALL BE CONSIDERED INCIDENTAL TO THE PROJECT TRAFFIC CONTROL AND NO ADDITIONAL PAYMENT SHALL BE MADE THEREFOR.

11. CONTRACTOR COMPLIANCE:
CONTRACTOR SHALL AT ALL TIMES COMPLY WITH THE FOLLOWING:

1. NMDOT SPECIFICATIONS FOR HIGHWAY AND BRIDGE CONSTRUCTION 2014 EDITION.

2. STANDARDS AND REQUIREMENTS SET FORTH IN THE MANUAL ON UNIFORM TRAFFIC CONTROL DEVICES, LATEST EDITION.

3. THE NEW MEXICO TRAFFIC CODE, LATEST EDITION.

12. WORKSITE GRAFFITI REMOVAL:
THE CONTRACTOR SHALL MAINTAIN A GRAFFITI-FREE WORKSITE. ALL GRAFFITI SHALL BE PROMPTLY REMOVED FROM ALL EQUIPMENT, BOTH PERMANENT AND TEMPORARY.

13. CONTRACTOR FAILURE TO COMPLY:
FAILURE TO COMPLY WITH ANY OF THE ABOVE MENTIONED, WILL BE ADEQUATE CAUSE TO CEASE ALL WORK ON ANY CONSTRUCTION PROJECT. WORK WILL NOT RESUME UNTIL ALL REQUIREMENTS ARE ADDRESSED AND APPROVED BY THE PROJECT MANAGER.

14. ADVANCED WARNING SIGNS:
WHEN APPLICABLE, ADVANCE WARNING SIGNS SHALL BE 36"x36" MIN. WITH SUPER ENGINEERING GRADE SHEETING OR BETTER. MOUNTING HEIGHT AT TOP OF SIGN SHALL BE THE SAME AS FOR A 48" SIGN AS INDICATED IN THE MUTCD.

ALL ADVANCE WARNING SIGNS SHALL BE DOUBLE INDICATED WHENEVER THERE IS MULTI-LANE TRAFFIC IN ANY ONE GIVEN DIRECTION AND THERE IS SUFFICIENT MEDIAN OR SHOULDER SPACE.

15. CONTRACTOR DEVELOPED TRAFFIC CONTROL PLANS:
ALL MODIFICATIONS TO TRAFFIC CONTROL PLANS MUST BE SUBMITTED TO THE CITY OF CARLSBAD TRAFFIC ENGINEER ON 11"x17" SHEETS 48 HOURS PRIOR TO IMPLEMENTATION FOR REVIEW AND APPROVAL.

THE CONTRACTOR SHALL PROVIDE AND MAINTAIN A SAFE AND ADEQUATE MEANS OF CHANNELIZING PEDESTRIAN AND BICYCLE TRAFFIC AROUND AND THROUGH THE CONSTRUCTION AREA AT ALL TIMES.

CONSTRUCTION SHALL NOT BEGIN UNLESS A TRAFFIC CONTROL PLAN AND A PEDESTRIAN TRAFFIC PLAN HAS BEEN REVIEWED AND APPROVED BY THE CITY OF CARLSBAD TRAFFIC ENGINEER.

THIS TRAFFIC CONTROL PLAN SET IS NOT INTENDED TO BE A COMPLETE AND ACCURATE PLAN FOR ALL TRAFFIC CONTROL DEVICES NEEDED DURING CONSTRUCTION. THE CONTRACTOR MUST ABIDE BY ALL MUTCD AND CITY TRAFFIC CONTROL REQUIREMENTS.

16. ALL TRAFFIC CONTROL DEVICES INCLUDING TEMPORARY STRIPING, REMOVAL OF STRIPING, SIGNS, SIGN SUPPORTS, BARRICADES AND ALL OTHER TRAFFIC CONTROL DEVICES SHALL BE INCLUDED IN ITEM NO. 702810 "TRAFFIC CONTROL DEVICES FOR CONSTRUCTION".

MOLZENCORBIN
1155 Commerce Dr., Suite F
Las Cruces, New Mexico 88011
575 522 0049 office
575 522 7884 fax
MolzenCorbin.com

WYATT D. KARTCHNER
NEW MEXICO
20843
REGISTERED PROFESSIONAL ENGINEER
10/15/15

REV NO	REV DATE	DESCRIPTION

PROJECT NUMBER: CRS133-12
DESIGNED BY: WDK
DRAWN BY: EG
CHECKED BY: JTM
PROJ ENGINEER: WDK
PROJECT DATE: OCTOBER 2015

TRAFFIC CONTROL PLAN
GENERAL NOTES

CALLAWAY DRIVE
CITY OF CARLSBAD
CARLSBAD, NEW MEXICO

C-504
SHEET

© COPYRIGHT

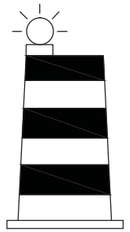

CHANNELIZING DRUM
N.T.S.

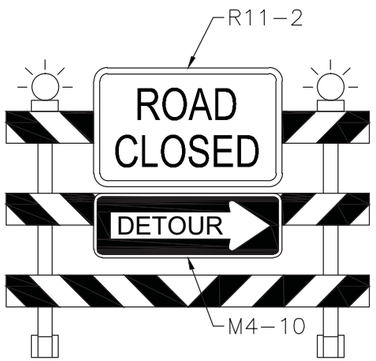

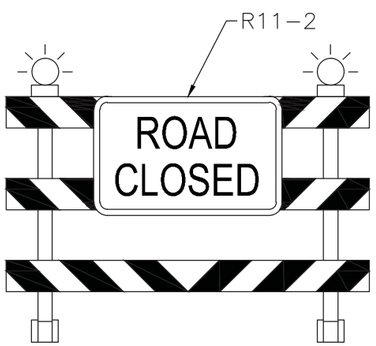

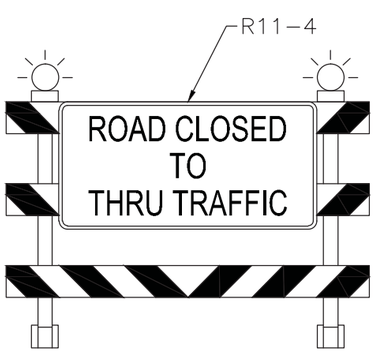

8' TYPE III BARRICADE
N.T.S.

W20-1
36"x36" B/O

W1-3L
36"x36" B/O

M4-8a
18"x24" B/O

M4-8
12"x24" B/O

W20-2
36"x36" B/O

R5-1
36"x36" W/R

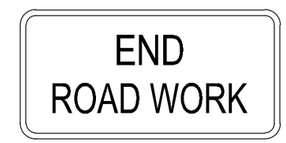

G20-2
18"x36" B/O

R2-1
36"x48" B/W

W20-3
36"x36" B/O

R5-1a
36"x24" W/R

M4-9L
30"x24" B/O

R6-1L
12"x36" B/W

W3-5a
36"x36" B/O

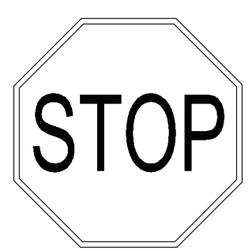

R1-1
36"x36" W/R

M4-9R
30"x24" B/O

R6-1R
12"x36" B/W

MOLZENCORBIN
1155 Commerce Dr., Suite F
Las Cruces, New Mexico 88011
575 522 0049 office
575 522 7884 fax
MolzenCorbin.com

WYATT D. KARTCHNER
NEW MEXICO
20843
10/15/15
REGISTERED PROFESSIONAL ENGINEER

REV NO	REV DATE	DESCRIPTION

PROJECT NUMBER: CRS133-12
DESIGNED BY: WDK
DRAWN BY: EG
CHECKED BY: JTM
PROJ ENGINEER: WDK
PROJECT DATE: OCTOBER 2015

TRAFFIC CONTROL PLAN DETAILS

CALLAWAY DRIVE
CITY OF CARLSBAD
CARLSBAD, NEW MEXICO

SHEET C-505

© COPYRIGHT

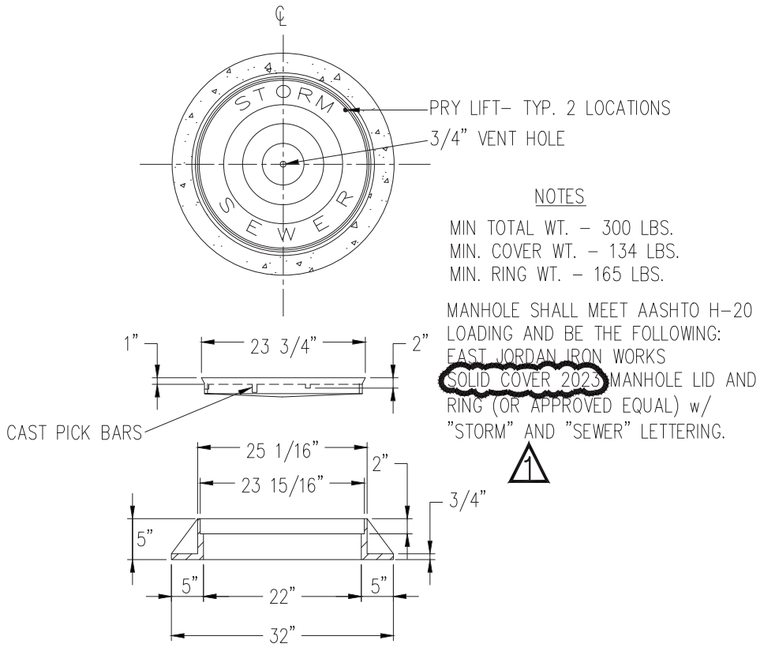

NOTES

MIN TOTAL WT. – 300 LBS.
MIN. COVER WT. – 134 LBS.
MIN. RING WT. – 165 LBS.

MANHOLE SHALL MEET AASHTO H–20 LOADING AND BE THE FOLLOWING: EAST JORDAN IRON WORKS SOLID COVER 2023 MANHOLE LID AND RING (OR APPROVED EQUAL) w/ "STORM" AND "SEWER" LETTERING.

1

STORM SEWER COVER AND FRAME DETAIL

N.T.S.

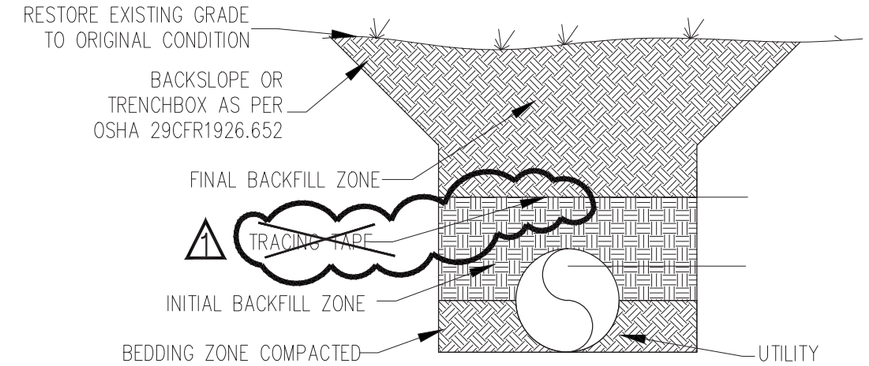

NOTES:

1. TRENCH WIDTHS, CROSS SECTIONS, SHALL BE IN COMPLIANT TO ALL APPLICABLE SAFETY STANDARDS AND REGULATIONS

STORM DRAIN TRENCH DETAIL (UNPAVED AREAS)

N.T.S.

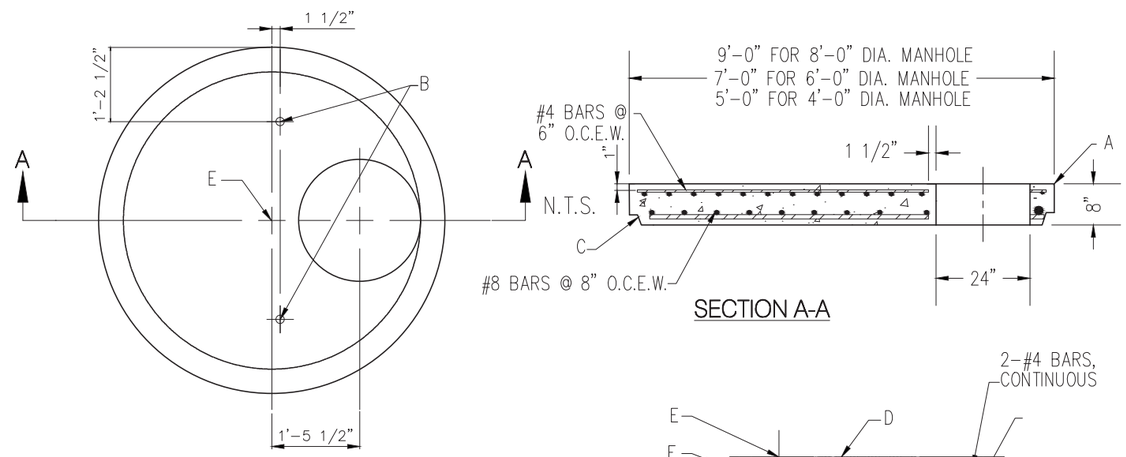

6' I.D. MANHOLE TOP

SECTION A-A

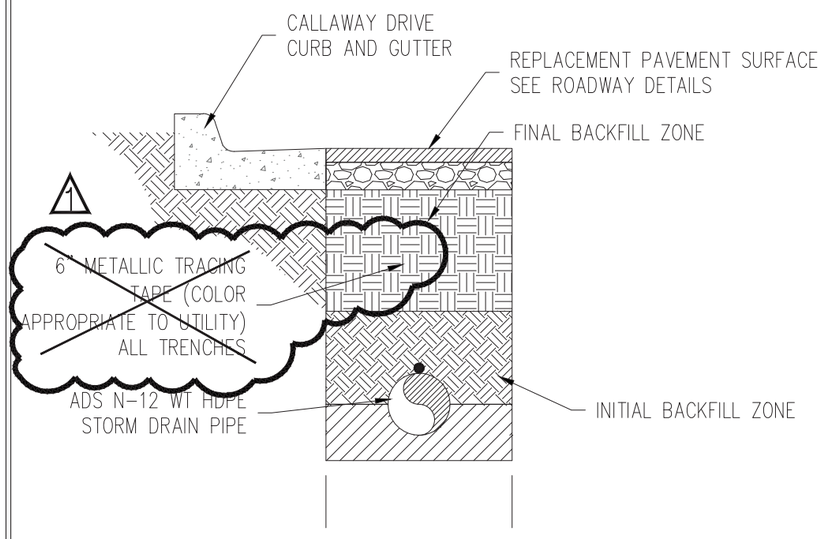

NOTE: EXISTING GRADE FOR TOP OF TRENCH IS GROUNDLINE AT TRENCH OR THE ADJACENT ROADWAY WHICH EVER IS LOWER

STORM DRAIN TRENCH DETAIL (PAVED AREAS)

N.T.S.

A. PRE–CAST REINF. CONC. MANHOLE TOP. (ROTATE TOP TO BE LOCATED OUTSIDE OF WHEEL PATHS AND AVOID CURB AND GUTTER
B. 1" PIPE SLEEVE VERTICALLY THROUGH COVER.
C. COVER SHALL BE MODIFIED TO SHAPE OF APPROPRIATE SIZE T & G JOINT.
D. FRAME AND COVER (STORM SEWER)
E. LAYOUT POINT FOR PLAN STATION, OFFSET AND RIM ELEVATION. (RIM ELEVATIONS TO BE ADJUSTED AS REQUIRED BY TOP ROTATION MENTIONED IN NOTE A.)
F. PRE–CAST 30" DIA. (D.D.) X 6" MAX. (TYP.) PIPE SECTION.
G. PRE–CAST MANHOLE SECTION AS REQ'D. HEIGHT VARIES. SEE PLAN FOR INVERTS AND RIM ELEVATIONS.
H. ALL REINFORMCEMENT SHALL BE PLACED SO THAT THE CENTERLINE OF BARS IN THE OUTER LAYER WILL BE 2" FROM THE FACE OF THE CONCRETE.
I. NON–SHRINK GROUT, SLOPE AS SHOWN AND PROVIDE FOR FLOW THROUGH INLET AS REQ'D BY STORM DRAIN CONFIGURATION.
J. NO–SHRINK GROUT FILLETS WITH RAMNEK BETWEEN FOOTINGS AND ALL PRE–CAST ELEMENTS.

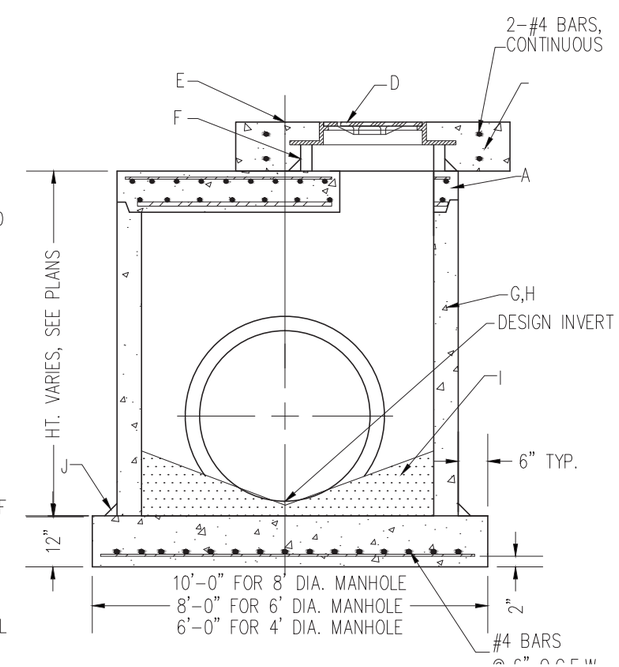

STORM DRAIN MANHOLE DETAIL

N.T.S.

Bohannan Huston
www.b□inc.com
800.877.5□□2

NOTICE OF EXTENDED PAYMENT PROVISION: THIS CONTRACT ALLOWS THE OWNER TO MAKE PAYMENT WITHIN 45 DAYS AFTER SUBMISSION OF AN UNDISPUTED REQUEST FOR PAYMENT

ANDREW G. GUERRA
NEW MEXICO
19125
PROFESSIONAL ENGINEER
2-22-16

REV NO.	REV DATE	DESCRIPTION
1	11/13/15	ADDENDUM 1

PROJECT NUMBER: CRS143-12
DESIGNED BY: AG
DRAWN BY: JM
CHECKED BY: AG
PROJECT DATE: OCTOBER 2015

CALLAWAY DRIVE
STORM DRAIN DETAILS

CALLAWAY DRIVE
CITY OF CARLSBAD
CARLSBAD, NEW MEXICO

C–600
SHEET

© COPYRIGHT

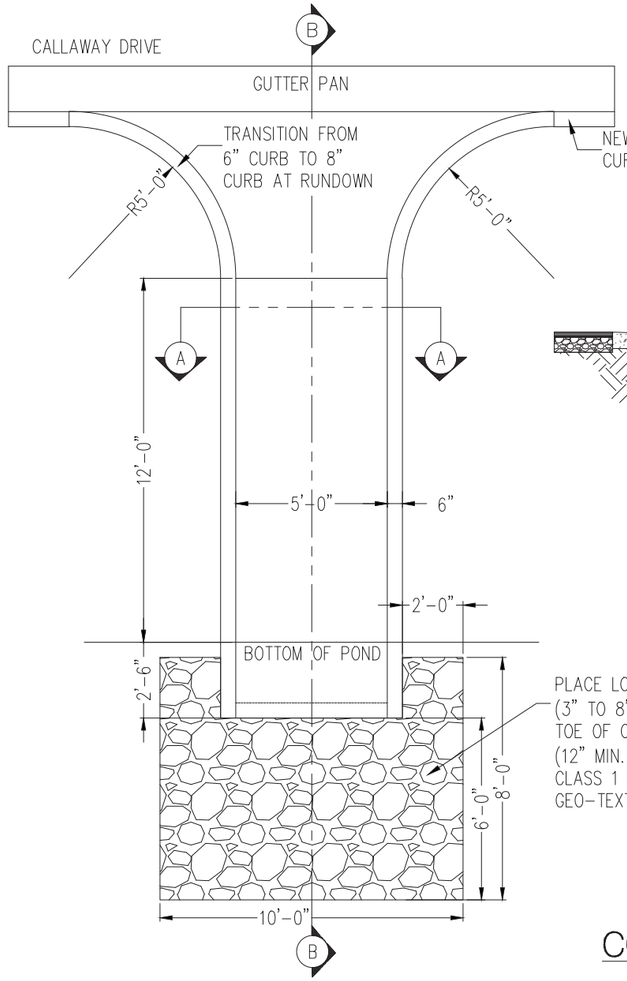

CONCRETE DRAINAGE RUNDOWN DETAIL

N.T.S.

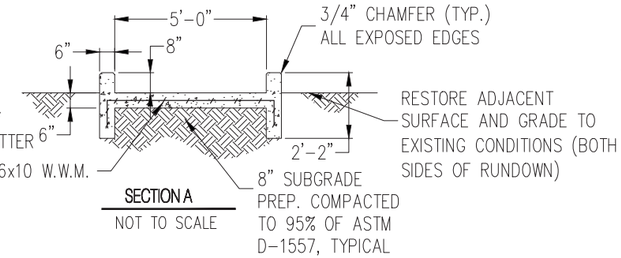

SECTION A

NOT TO SCALE

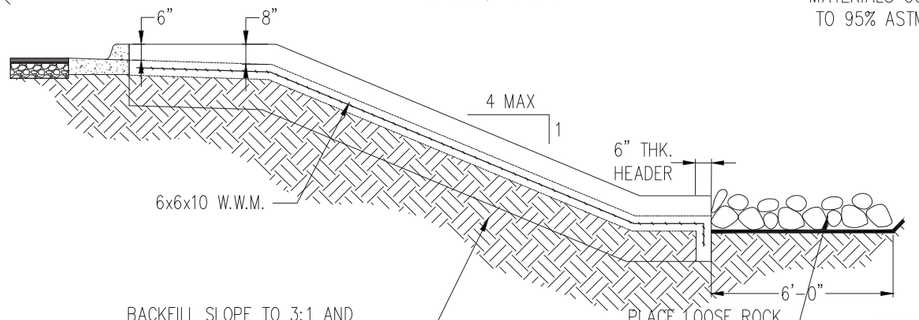

SECTION B

NOT TO SCALE

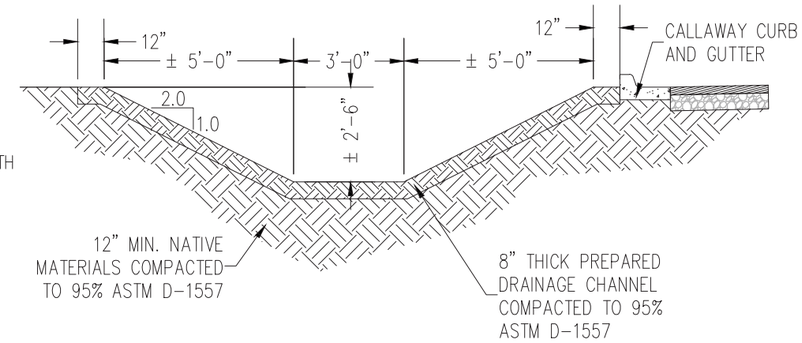

DRAINAGE CHANNEL DETAIL

N.T.S.

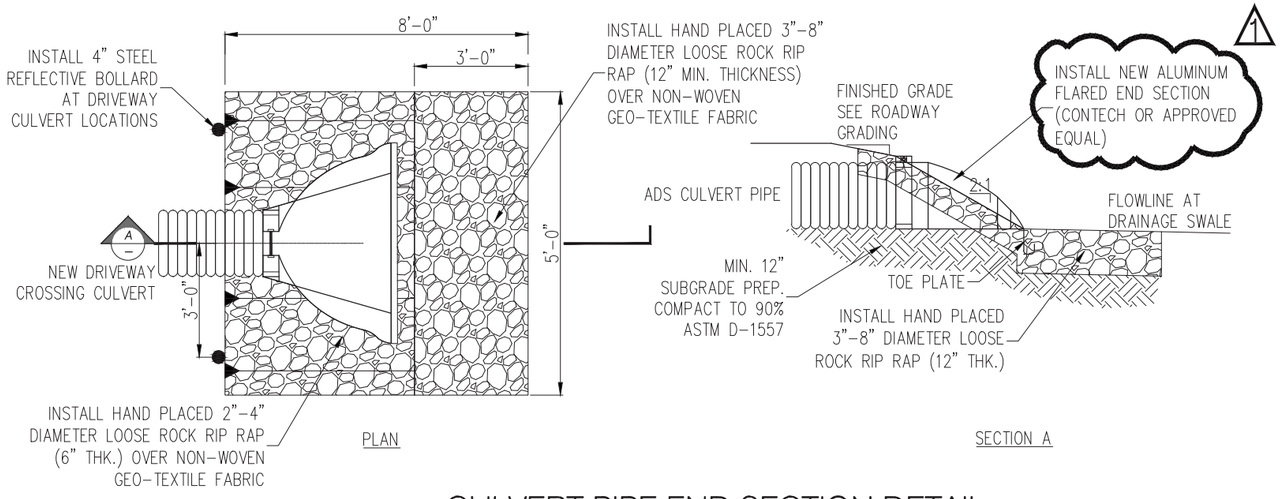

CULVERT PIPE END SECTION DETAIL

N.T.S.

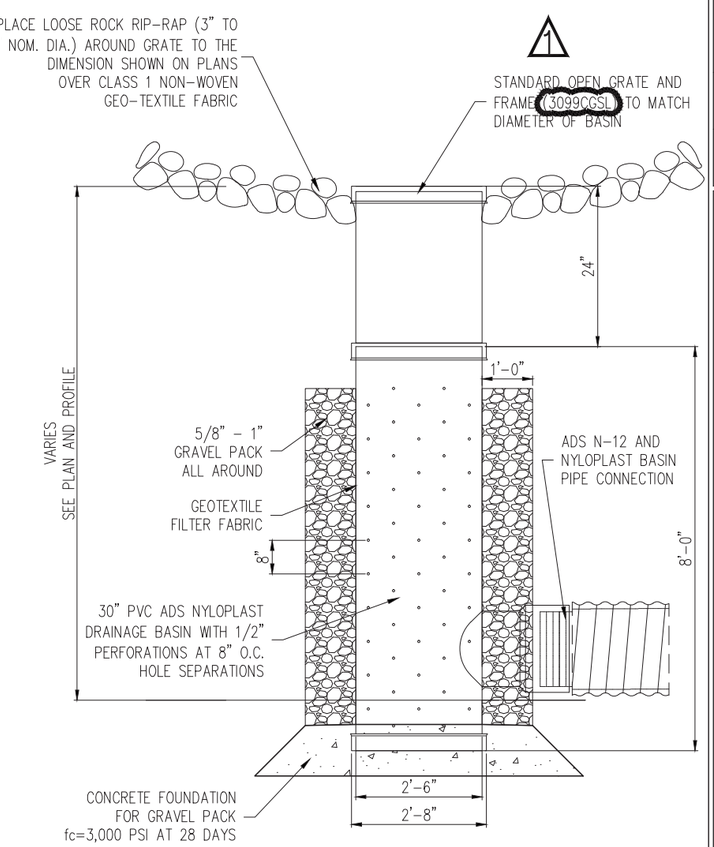

PERFORATED DRAIN BASIN DETAIL

N.T.S.

Bohannan Huston
www.b□inc.com
800.877.5□□2

NOTICE OF EXTENDED PAYMENT PROVISION:
THIS CONTRACT ALLOWS THE OWNER TO MAKE PAYMENT WITHIN 45 DAYS AFTER SUBMISSION OF AN UNDISPUTED REQUEST FOR PAYMENT

ANDREW G. GUERRA
NEW MEXICO
19125
PROFESSIONAL ENGINEER
2-22-16

REV NO.	REV DATE	DESCRIPTION
1	11/13/15	ADDENDUM 1

PROJECT NUMBER: CRS143-12
DESIGNED BY: AG
DRAWN BY: JM
CHECKED BY: AG
PROJECT DATE: OCTOBER 2015

CALLAWAY DRIVE
STORM DRAIN DETAILS

CALLAWAY DRIVE
CITY OF CARLSBAD
CARLSBAD, NEW MEXICO

C-601

SHEET

© COPYRIGHT

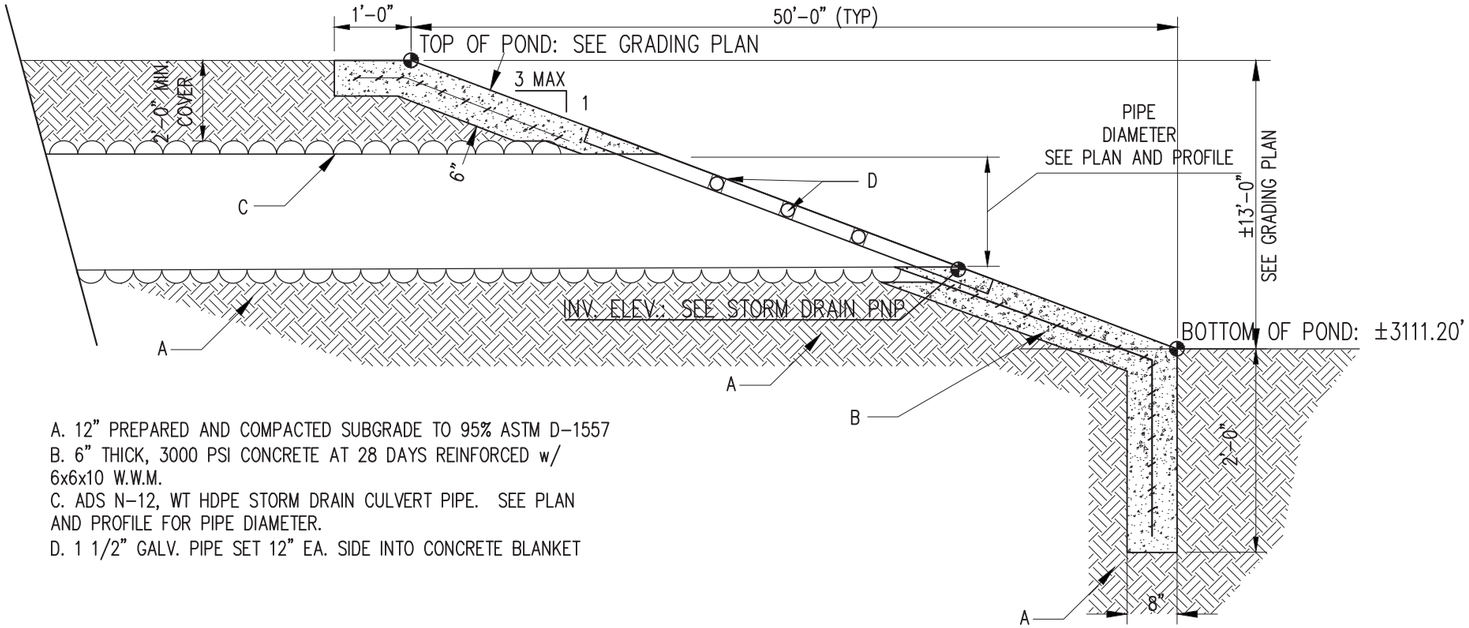

A. 12" PREPARED AND COMPACTED SUBGRADE TO 95% ASTM D-1557
B. 6" THICK, 3000 PSI CONCRETE AT 28 DAYS REINFORCED w/ 6x6x10 W.W.M.
C. ADS N-12, WT HDPE STORM DRAIN CULVERT PIPE. SEE PLAN AND PROFILE FOR PIPE DIAMETER.
D. 1 1/2" GALV. PIPE SET 12" EA. SIDE INTO CONCRETE BLANKET

COPPERSTONE APPARTMENTS STORM DRAIN OUTLET DETAIL

N.T.S.

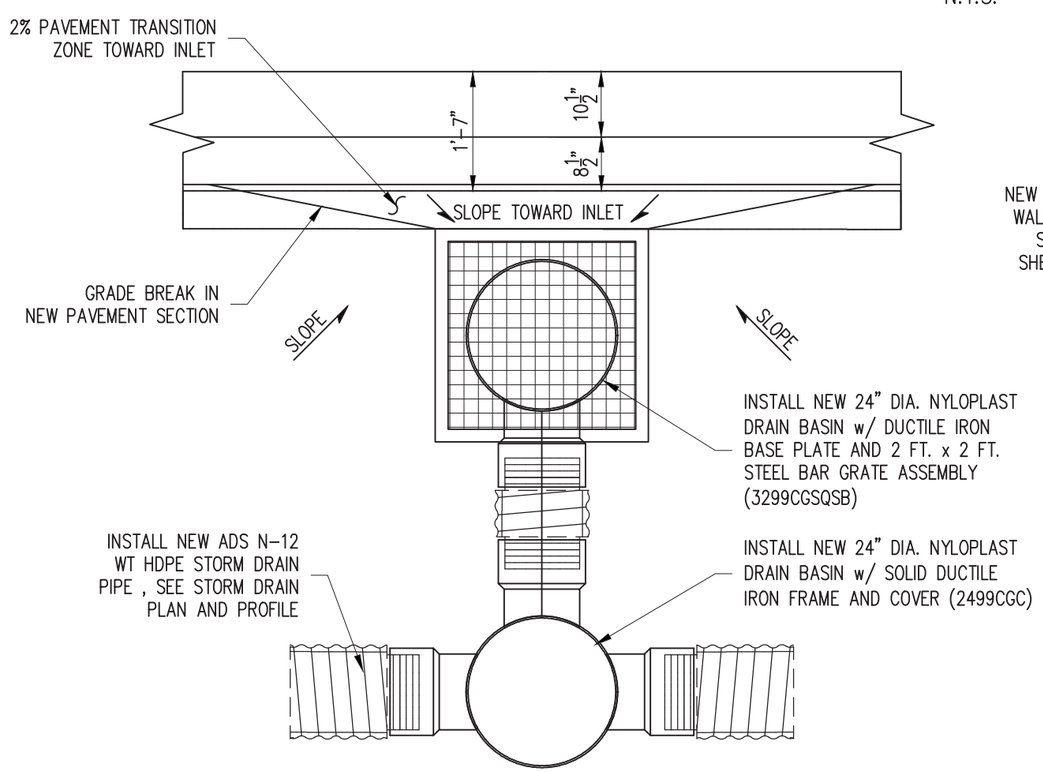

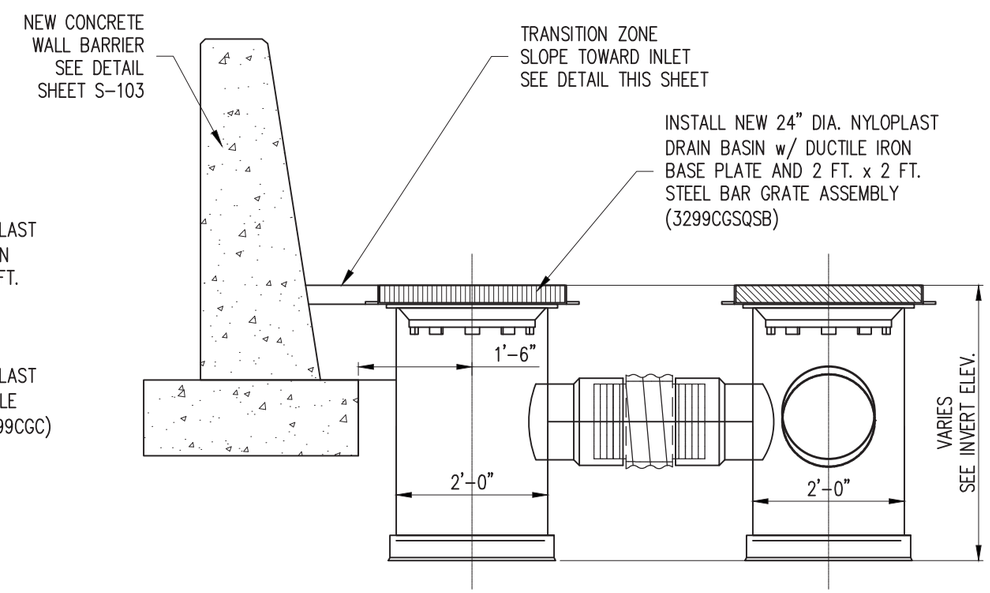

2 FT. X 2 FT. NYLOPLAST DRAIN BASIN AT CWB DETAIL

N.T.S.

Bohannan Huston
www.b□inc.com
800.877.5□□2

NOTICE OF EXTENDED PAYMENT PROVISION: THIS CONTRACT ALLOWS THE OWNER TO MAKE PAYMENT WITHIN 45 DAYS AFTER SUBMISSION OF AN UNDISPUTED REQUEST FOR PAYMENT

ANDREW G. GUERRA
NEW MEXICO
19125
PROFESSIONAL ENGINEER
2-22-16

REV NO.	REV DATE	DESCRIPTION

PROJECT NUMBER: CRS143-12
DESIGNED BY: AG
DRAWN BY: JM
CHECKED BY: AG
PROJECT DATE: OCTOBER 2015

CALLAWAY DRIVE
STORM DRAIN DETAILS

CALLAWAY DRIVE
CITY OF CARLSBAD
CARLSBAD, NEW MEXICO

C-602
SHEET

© COPYRIGHT

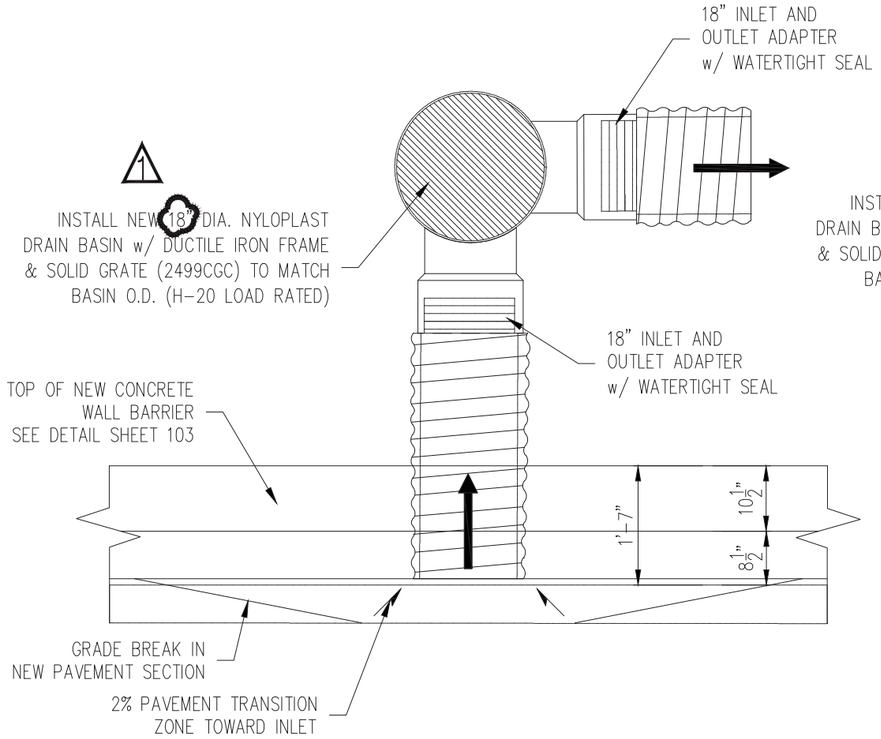

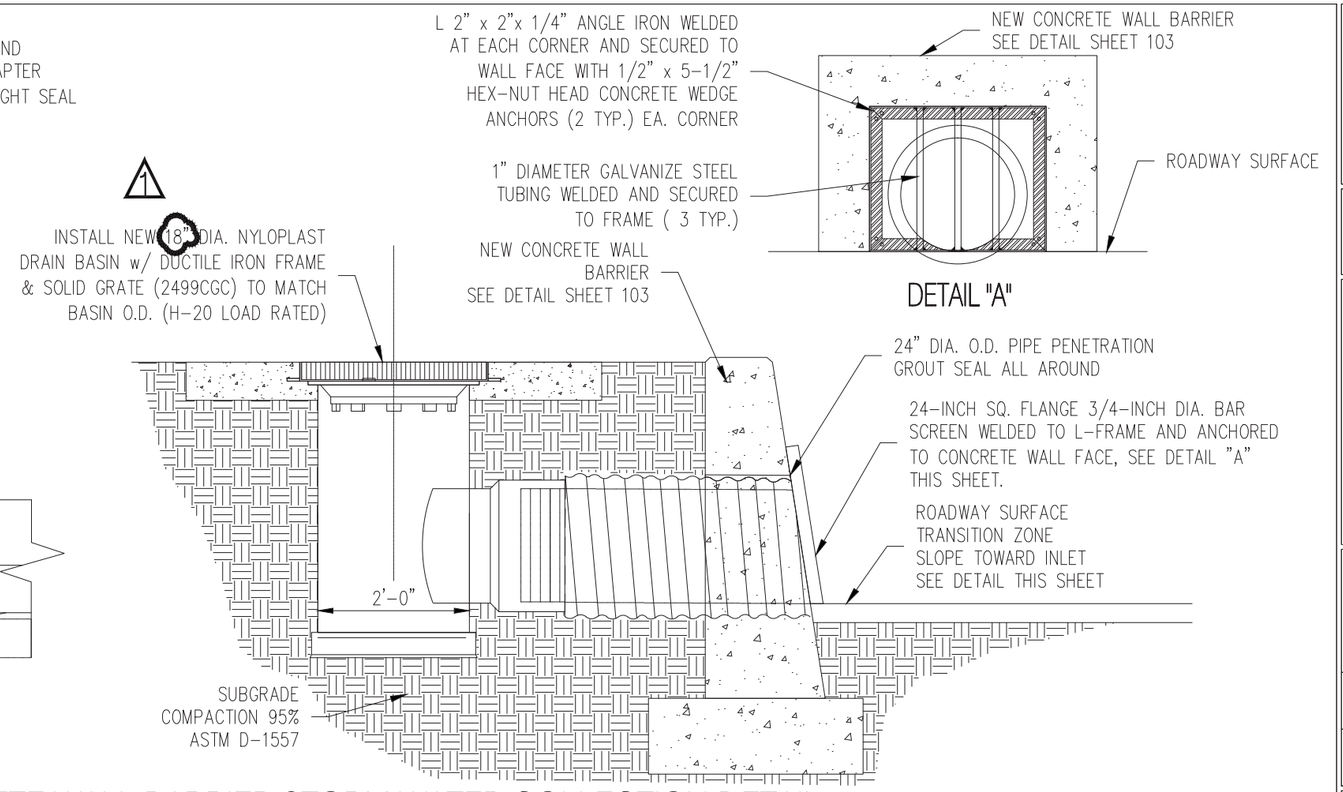

CONCRETE WALL BARRIER STORM WATER COLLECTION DETAIL

N.T.S.

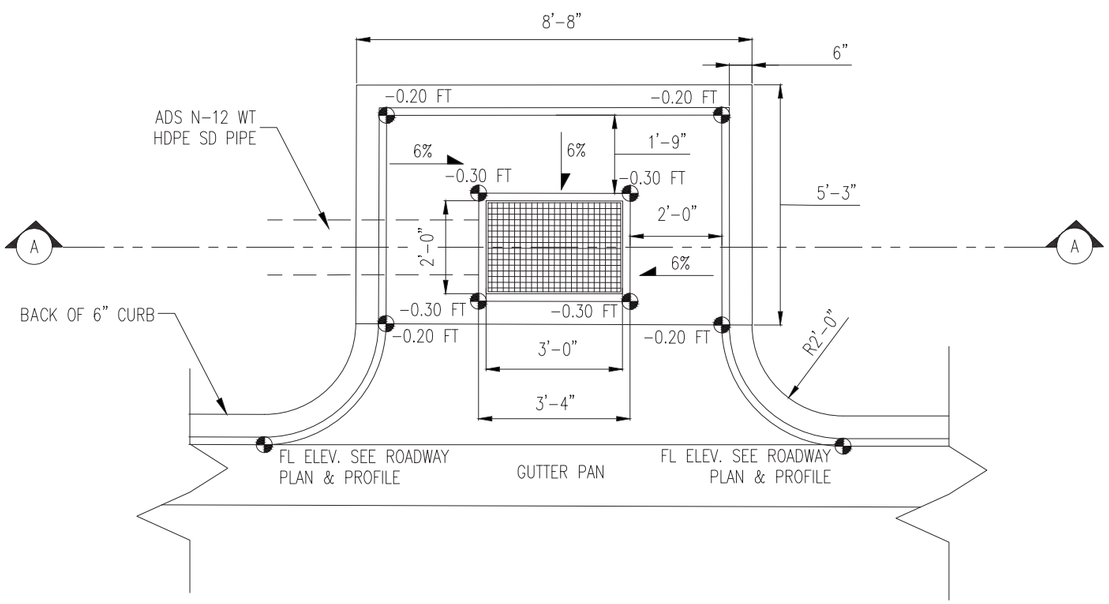

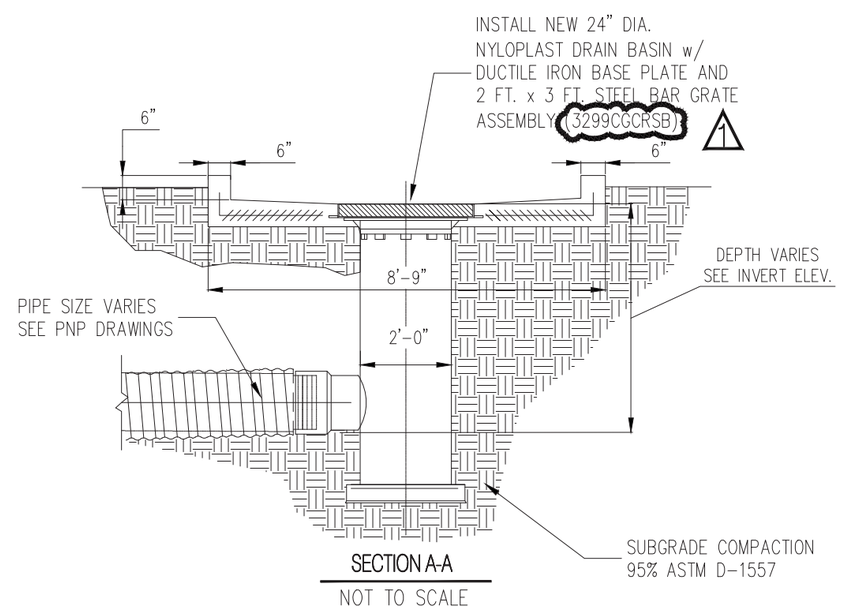

CURB EXTENSION & DROP INLET DETAIL

N.T.S.

Bohannan Huston

www.b□inc.com
800.877.5□□2

NOTICE OF EXTENDED PAYMENT PROVISION:
THIS CONTRACT ALLOWS THE OWNER TO MAKE PAYMENT WITHIN 45 DAYS AFTER SUBMISSION OF AN UNDISPUTED REQUEST FOR PAYMENT

ANDREW G. GUERRA
NEW MEXICO
19125
PROFESSIONAL ENGINEER
2-22-16

REV NO.	REV DATE	DESCRIPTION
1	11/13/15	ADDENDUM 1

PROJECT NUMBER: CRS143-12
DESIGNED BY: AG
DRAWN BY: JM
CHECKED BY: AG
PROJECT DATE: OCTOBER 2015

CALLAWAY DRIVE
STORM DRAIN DETAILS

CALLAWAY DRIVE
CITY OF CARLSBAD
CARLSBAD, NEW MEXICO

C-603
SHEET

© COPYRIGHT

GENERAL NOTES:

1. NMDOT IS RECOGNIZED AS A TITLE II PUBLIC ENTITY UNDER THE AMERICANS WITH DISABILITIES ACT (ADA), OF 1990 (PUBLIC LAW 101-336). A TITLE II ENTITY IS DEFINED AS ANY STATE OR LOCAL GOVERNMENT ENTITY AND PROHIBITS DISCRIMINATION ON THE BASIS OF DISABILITY. THE ADA EXTENDS THE PRINCIPLES OF SECTION 504 OF THE REHABILITATION ACT, OF 1973, AS AMENDED, TO PROTECT PERSONS WITH DISABILITIES IN ALL PUBLIC FACILITIES AND PROGRAMS IRRESPECTIVE OF THE FUNDING SOURCE.
2. THESE DRAWINGS PROVIDE GUIDANCE FOR COMPLIANCE WITH THE PROPOSED ACCESSIBILITY GUIDELINES FOR PEDESTRIAN FACILITIES IN THE PUBLIC RIGHT-OF-WAY (PROWAG), JULY 26, 2011, OR LATEST EDITION . THESE GUIDELINES SHALL APPLY TO ALL NEW AND ALTERED PEDESTRIAN ACCESS ROUTES (PAR).
3. REFER TO CONSTRUCTION PLANS FOR THE DETAILED LAYOUTS AND DETAILS.
4. PEDESTRIAN ACCESS ROUTES (PAR) SHALL BE FIRM, STABLE, AND SLIP RESISTANT. PROVIDE SLIP RESISTANT TEXTURE ON SIDEWALKS AND CURB RAMPS BY BROOMING TRANSVERSE TO THE SLOPE OF THE RAMP AND /OR PERPENDICULAR TO PEDESTRIAN TRAVEL EXTEND TEXTURE THE FULL WIDTH AND LENGTH OF THE CURB RAMP INCLUDING SIDE FLARES. DO NOT SCORE OR MAKE GROOVES IN SLOPED SURFACE. LINES SHOWN ON STANDARD DETAILS ARE FOR ILLUSTRATIONS ONLY.
5. VERTICAL SURFACE DISCONTINUITIES SHALL BE 0.5 INCHES MAXIMUM. VERTICAL DISCONTINUITIES BETWEEN 0.25 INCHES AND 0.5 INCHES SHALL BE BEVELED WITH A SLOPE NOT STEEPER THAN 50 PERCENT. THE BEVEL SHALL BE APPLIED ACROSS THE ENTIRE VERTICAL SURFACE DISCONTINUITY.
6. HORIZONTAL OPENINGS IN GRATINGS AND JOINTS SHALL NOT PERMIT PASSAGE OF A SPHERE MORE THAN 0.5 INCHES IN DIAMETER. ELONGATED OPENINGS IN GRATES SHALL BE PLACED SO THAT THE LONG DIMENSION IS PERPENDICULAR TO THE DOMINANT DIRECTION OF TRAVEL.
7. PROVIDE EXPANSION JOINT MATERIAL 0.5 INCHES THICK WHERE CURB RAMP ADJOINS ANY RIGID PAVEMENT, SIDEWALK OR STRUCTURE WITH THE TOP OF JOINT FILLER FLUSH WITH ADJACENT CONCRETE SURFACE.
8. SEAL ALL JOINTS WITH AN APPROVED SEALING MATERIAL.
9. INSTALL JOINTS WHERE CURB RAMPS, TURNING SPACES, FLARES, AND SIDEWALKS ABUT. ALL JOINTS AND TRANSITIONS SHALL BE FLUSH
10. VERTICAL WALLS OR HEADER CURBS ARE PERMITTED WHEN ADJACENT TO NON-WALK AREAS OR ELEVATION DIFFERENCES CANNOT BE ACCOMMODATED BY CURB RAMP FLARES OR GRADING. GRADE NON-WALK AREAS AT 3:1 OR FLATTER.
11. CONSTRUCTION TOP / BOTTOM OF CURB TO BE FLUSH WITH ADJACENT SURFACES (CURB RAMPS, SIDEWALKS, AND FLARES). VERTICAL LIPS NOT PERMITTED AT THE BOTTOM OF CURB RAMP WHERE THE RAMP MEETS STREET LEVEL.

SIDEWALKS

12. SIDEWALK, AND CURB AND GUTTER CONSTRUCTION SHALL BE IN ACCORDANCE WITH SERIAL 609-01-1/1.
13. SIDEWALK CROSS SLOPE IS RECOMMENDED TO BE CONSTRUCTED FOR CROSS SLOPE OF 1.5% TYPICAL, BUT SHALL NOT EXCEED 2.0% CROSS SLOPE ON THE PEDESTRIAN ACCESS ROUTE (PAR).
14. SIDEWALK SHALL HAVE A MINIMUM WIDTH OF 5.0 FT, EXCLUSIVE OF THE WIDTH OF THE CURB RETURN.
    EXCEPTION: WHERE SIDEWALK WIDTH NEEDS TO BE REDUCED TO NO LESS 4.0 FT, PASSING SPACES SHALL BE PROVIDED AT INTERVALS OF 200 FT MAXIMUM. PASSING SPACES SHALL BE 5.0 FT MINIMUM BY 5.0 FT MINIMUM.
15. ANY SIGNS POSTS, UTILITY POLES, FIRE HYDRANTS, TRAFFIC SIGNALS, STREET FURNITURE, AND OTHER OBJECTS SHALL NOT REDUCE THE CLEAR WIDTH TO LESS THAN 4.0 FT.
16. THE CLEAR WIDTH OF PEDESTRIAN ACCESS ROUTES (PAR) WITHIN MEDIANS AND PEDESTRIAN REFUGE ISLANDS SHALL BE 5 0 FT MINIMUM.

CURB RAMPS

17. FOR NEW CONSTRUCTION AND ALTERATIONS, CONSTRUCT CURB RAMP AND FLARE SLOPES WITH THE FLATTEST SLOPE FEASIBLE. THE MAXIMUM SLOPE ALLOWABLE IS INDICATED IN NOTE 18 OF THE CURB RAMP STANDARD DETAILS. SLOPES THAT EXCEED THOSE INDICATED IN THE CURB RAMP STANDARD DETAILS, OR CONSTRUCTION PLANS, WILL NOT BE ACCEPTED AND WILL BE REMOVED AND RECONSTRUCTED.
18. RUNNING SLOPE OF THE CURB RAMP SHALL BE 8.3 % MAX (RECOMMENDED 7.0%) BUT SHALL NOT REQUIRE THE RAMP LENGTH TO EXCEED 15.0 FT TO AVOID CHASING THE SLOPE INDEFINITELY WHEN CONNECTING TO STEEP GRADES. WHEN APPLYING THE 15 FOOT MAX LENGTH, THE RUNNING SLOPE OF THE CURB RAMP SHALL BE EXTENDED AS FLAT AS MAXIMUM EXTENT PRACTICABLE.
19. CONSTRUCT THE CLEAR WIDTH OF CURB RAMP RUNS (EXCLUDING ANY FLARED SIDES), BLENDED TRANSITIONS, AND TURNING SPACES AS TYPICAL 5.0 FT X 5.0 FT AND MINIMUM 4.0 FT X 4.0 FT CLEAR SPACE BEYOND THE CURB FACE, WITHIN THE WIDTH OF THE CROSSWALK AND WHOLLY OUTSIDE THE PARALLEL VEHICLE TRAVEL LANE.
20. CURB RAMP AND SIDE FLARE LENGTHS ARE VARIABLE AND BASED ON CURB HEIGHT AND THE SIDEWALK SLOPE.
21. THE CHANGE IN GRADE AT THE BOTTOM OF THE CURB RAMP AND ADJOINING ROAD SURFACE SHALL NOT EXCEED AN ALGEBRAIC DIFFERENCE OF 13.3%. THE COUNTER SLOPE OF THE GUTTER OR ROAD AT THE FOOT OF A CURB RAMP RUNS, TURNING SPACE OR BLENDED TRANSITION IS NOT TO EXCEED 5.0%.
22. CONSTRUCT CURB RAMPS FLUSH TO ADJACENT ROADWAY. GRADE EDGE OF ROAD ELEVATIONS AT THE FLOW LINE TO ENSURE POSITIVE DRAINAGE AND PREVENT PONDING. FOR LEVEL TURNING SPACES BEHIND CURB, ADJUST SLOPES TO PROVIDE POSITIVE DRAINAGE.
23. GRADE BREAKS AT THE TOP AND BOTTOM OF CURB RAMPS SHALL BE PERPENDICULAR TO THE DIRECTION OF THE CURB RAMP RUN. GRADE BREAKS SHALL NOT BE PERMITTED ON THE SURFACE OF CURB RAMP RUNS AND TURNING SPACES. SURFACE SLOPES THAT MEET AT GRADE BREAKS SHALL BE FLUSH.
24. ALL SLOPES ARE MEASURED WITH RESPECT TO A LEVEL PLANE. THEREFORE, THE LENGTH OF CURB RAMP IS NOT SOLELY DEPENDENT ON THE HEIGHT OF CURB. (FOR EXAMPLE, A 6" CURB DOES NOT NECESSARILY MEAN A RAMP LENGTH OF 6.0 FT FOR AN 8.3% SLOPE).

CROSSWALKS

25. PROVIDE A SEPARATE CURB RAMP FOR EACH MARKED OR UNMARKED CROSSWALK. CURB RAMP LOCATIONS SHALL BE PLACED WITHIN THE WIDTH OF THE MARKED OR UNMARKED CROSSWALK AS SHOWN IN THE CONSTRUCTION PLANS.

DETECTABLE WARNING

26. DETECTABLE WARNING SURFACES (DWS) CONSISTING OF TRUNCATED DOMES SHALL BE UTILIZED WHERE CURB RAMPS, BLENDED TRANSITIONS, OR TURNING SPACE PROVIDE A FLUSH PEDESTRIAN CONNECTION TO THE STREET OR WHERE THE PEDESTRIAN ACCESS ROUTE (PAR) CROSSES A STREET, ALLEY, TRAFFIC ISLAND, MEDIAN, OR RAILROAD. DETECTABLE WARNING SURFACES (DWS) WILL NOT BE INSTALLED AT RESIDENTIAL DRIVEWAYS. DETECTABLE WARNING SURFACE MUST BE PROVIDED AT THE JUNCTION BETWEEN THE PAR AND COMMERCIAL DRIVEWAYS THAT ARE STOP OR YIELD CONTROLLED OR ARE CONTROLLED BY A SIGNAL.
27. DETAILS OF DETECTABLE WARNING SURFACE ARE SHOWN IN CONTRACT PLANS AND SHEET 608-001-8/12 OF THE STANDARD DRAWINGS.

ACCESSIBLE PEDESTRIAN SIGNALS (APS) AND PEDESTRIAN PUSHBUTTONS

28. FOR ALTERATION PROJECTS, PROVIDE ACCESS TO EXISTING PEDESTRIAN PUSHBUTTONS TO THE MAXIMUM EXTENT PRACTICABLE INSTALL PEDESTRIAN STUB POLES, WHERE APPLICABLE, SO AS NOT TO CREATE PEDESTRIAN OBSTRUCTIONS. REFER TO THE MUTCD FOR FURTHER GUIDANCE.
29. PEDESTRIAN SIGNAL PUSH BUTTONS SHALL COMPLY WITH THE CURRENT EDITION OF THE MANUAL ON UNIFORM TRAFFIC CONTROL DEVICES (MUTCD) AND LOCATED WITHIN A HORIZONTAL REACH OF 0" TO 10" AND SHALL BE WITHIN 36" TO 46" ABOVE THE SIDEWALK SURFACE.
30. PEDESTRIAN SIGNAL SHALL HAVE 4FTx4FT MIN TURNING SPACE TO PROVIDE ACCESS TO PUSH BUTTONS.

ALTERATIONS TO EXISTING FACILITIES - GENERAL NOTES:

ADDITIONS OR ALTERATIONS TO ANY FACILITY SHALL CONFORM TO THE REQUIREMENTS OF THE NEW CONSTRUCTION STANDARDS WITHIN THE NMDOT PEDESTRIAN ACCESS STANDARDS AND PROWAG 2011 OR LATEST EDITION. ANY DESIGN / CONSTRUCTION DEVIATION THAT IS DEEMED AN VARIANCE OR TECHNICALLY INFEASIBLE BY THE DEFINITION BELOW SHALL REQUIRE SUBMITTAL AND APPROVAL OF ADA DESIGN VARIANCE PROCEDURES.

31. EXCEPTION: IN ALTERATION WORK, IF COMPLIANCE IS TECHNICALLY INFEASIBLE, THE ALTERATION SHALL PROVIDE ACCESSIBILITY TO THE MAXIMUM EXTENT PRACTICABLE. ANY ELEMENTS OR FEATURES OF THE BUILDING OR FACILITY THAT IS BEING ALTERED AND CAN BE MADE ACCESSIBLE SHALL BE MADE ACCESSIBLE WITHIN THE SCOPE OF THE ALTERATION.

32. TECHNICAL INFEASIBILITY: MEANS, WITH RESPECT TO AN ALTERATION OF A BUILDING OR A FACILITY, THAT IT HAS LITTLE LIKELIHOOD OF BEING ACCOMPLISHED BECAUSE EXISTING STRUCTURAL CONDITIONS WOULD REQUIRE REMOVING OR ALTERING A LOAD-BEARING MEMBER WHICH IS AN ESSENTIAL PART OF THE STRUCTURAL FRAME; OR BECAUSE OTHER EXISTING PHYSICAL OR SITE CONSTRAINTS PROHIBIT.

33. IN ALTERATIONS WHERE EXISTING PHYSICAL CONSTRAINTS PREVENT COMPLIANCE TO PROVDE A CURB RAMP FOR EACH PEDESTRIAN CROSSING A SINGLE DIAGONAL CURB RAMP SHALL BE PERMITTED TO SERVE BOTH PEDESTRIAN STREET CROSSINGS.

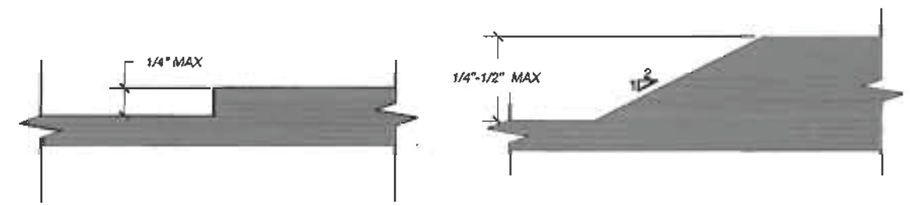

VERTICAL SURFACE DISCONTINUITIES
SCALE: NONE — REFER TO NOTE 5

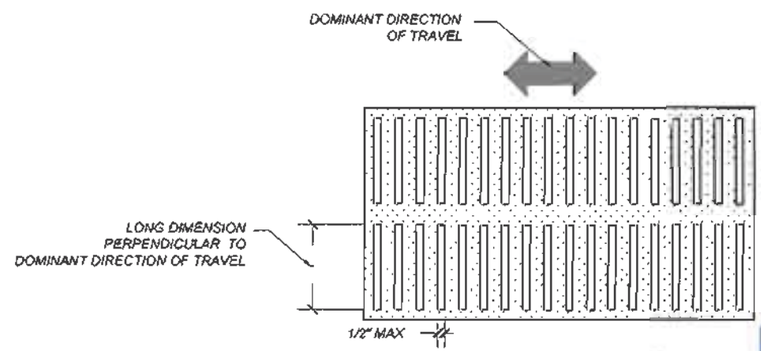

HORIZONTAL OPENINGS
SCALE: NONE — REFER TO NOTE 6

MICHAEL J. SMELKER
NEW MEXICO
15
LICENSED PROFESSIONAL ENGINEER
1-13-15

NO.	DATE	REV. BY	DESCRIPTION

REVISIONS (OR CHANGE NOTICES)

NEW MEXICO
DEPARTMENT OF TRANSPORTATION
STANDARD DRAWING

PEDESTRIAN ACCESS ROUTE
GENERAL NOTES

APPROVED: DESIGN ENGINEER — DATE 1-13-15

608-001-1 — 608-1 of 12

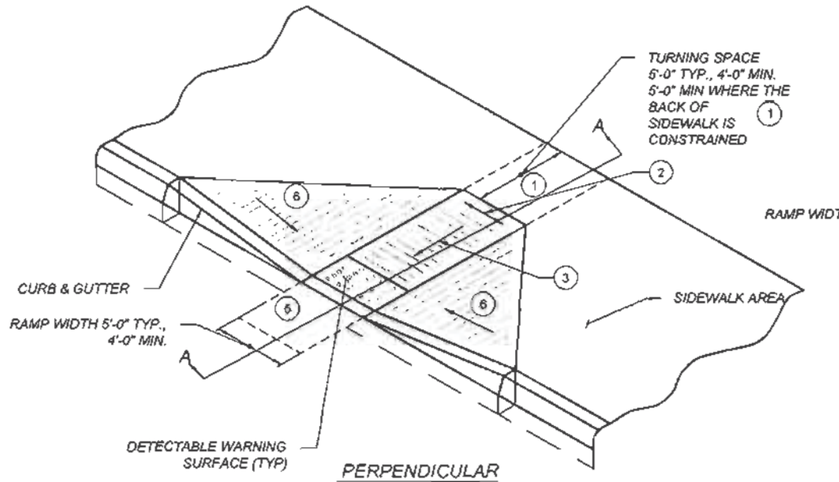

PERPENDICULAR
CURB RAMP
SCALE: NONE

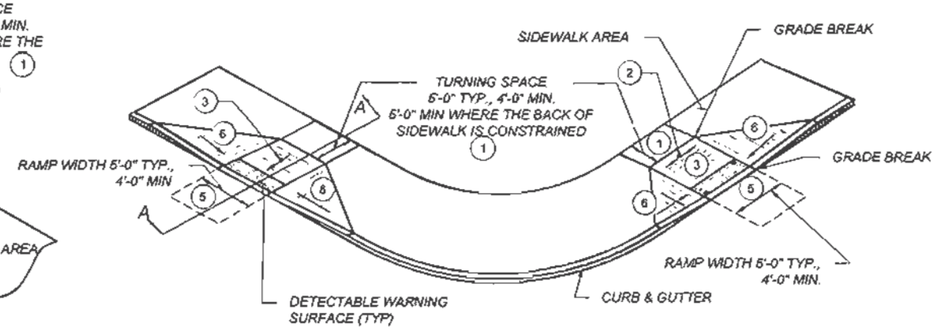

DUAL PERPENDICULAR
CURB RAMP
(PREFERRED INSTALLATION)
SCALE: NONE

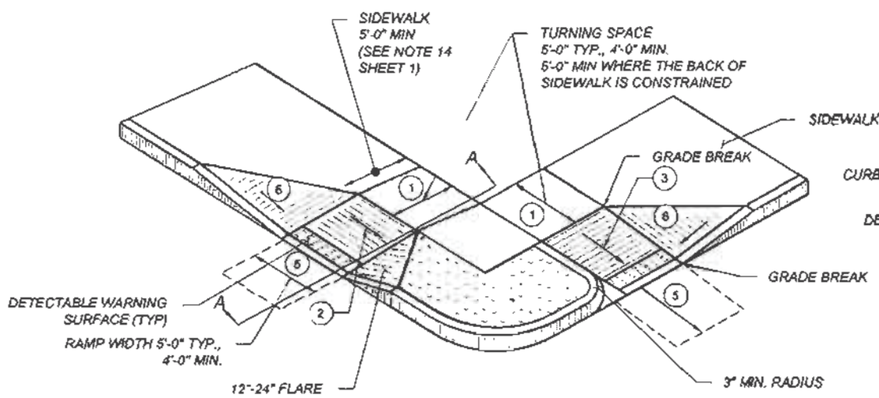

DUAL PERPENDICULAR
CURB RAMP
(ALTERNATE INSTALLATION)
SCALE: NONE

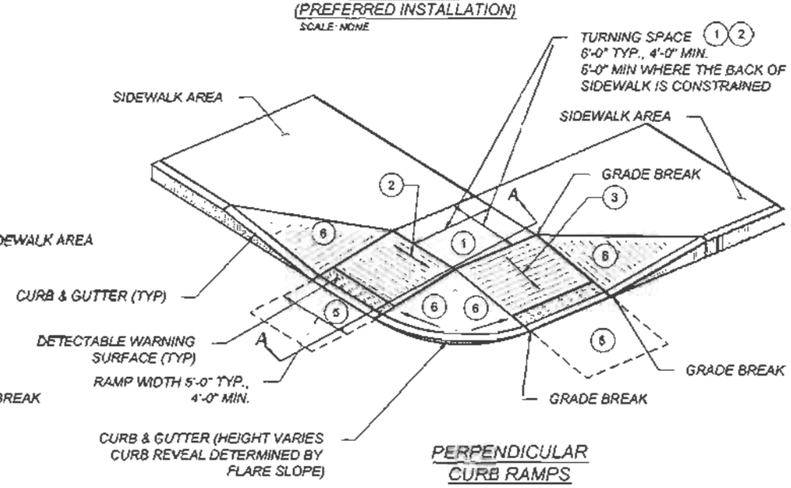

PERPENDICULAR
CURB RAMPS
WITH SHARED TURNING SPACE
SCALE: NONE

KEYED NOTES

1. TURNING SPACE SHALL HAVE MAXIMUM CROSS SLOPE AND LONGITUDINAL SLOPE OF 2.0% (RECOMMEND 1.5%). TURNING SPACE SHALL BE 4.0 FT BY 4.0 FT MIN (RECOMMEND 5.0 FT BY 5.0 FT) AT THE TOP OF THE CURB RAMP AND SHALL BE PERMITTED TO OVERLAP OTHER TURNING SPACES AND CLEAR SPACES. WHERE THE TURNING SPACE IS CONSTRAINED AT THE BACK OF SIDEWALK, THE TURNING SPACE SHALL BE 4.0 FT MIN BY 5.0 FT MIN. THE 5.0 FT SHALL BE PROVIDED IN THE DIRECTION OF THE RAMP RUN.
2. CROSS SLOPE SHALL BE 2.0% MAX (RECOMMENDED 1.5%). EXCEPTION. THE CROSS SLOPE OF CURB RAMPS AT PEDESTRIAN STREET CROSSING WITHOUT YIELD OR STOP CONTROL, TRAFFIC SIGNALS DESIGNED FOR THE GREEN PHASE, AND AT MIDBLOCK PEDESTRIAN STREET CROSSING, THE CROSS SLOPE IS PERMITTED TO MATCH STREET OR HIGHWAY GRADE.
3. RUNNING SLOPE OF THE CURB RAMP SHALL BE 8.3 % MAX (RECOMMENDED 7.0%) BUT SHALL NOT REQUIRE THE RAMP LENGTH TO EXCEED 15.0 FT TO AVOID CHASING THE SLOPE INDEFINITELY WHEN CONNECTING TO STEEP GRADES. WHEN APPLYING THE 15 FOOT MAX LENGTH, THE RUNNING SLOPE OF THE CURB RAMP SHALL BE EXTENDED AS FLAT AS MAXIMUM EXTENT PRACTICABLE.
4. GRADE BREAKS AT THE TOP AND BOTTOM OF CURB RAMPS RUNS SHALL BE PERPENDICULAR TO THE DIRECTION OF THE RAMP RUN GRADE BREAKS SHALL NOT BE PERMITTED ON THE SURFACE OF RAMP RUNS AND TURNING SPACE. SURFACE SLOPES THAT MEET AT GRADE BREAKS SHALL BE FLUSH.
5. COUNTER SLOPE OF THE GUTTER OR STREET AT THE FOOT OF A CURB RAMP, RUN OR TURNING SPACE SHALL BE 5% MAX.
6. FLARED SIDES ARE TO HAVE A SLOPE OF 10% MAX (RECOMMEND 9%), MEASURED PARALLEL TO THE BACK OF THE CURB, UNLESS THE FLARED SIDES ARE PROTECTED FROM CROSS TRAVEL BY LANDSCAPING, STREET FURNITURE, CHAINS, FENCING, OR RAILINGS.

NOTES:

- (A) DO NOT SCORE OR MAKE GROOVES IN SLOPED SURFACE. LINES SHOWN ON STANDARD DETAILS ARE FOR ILLUSTRATION ONLY.
- (B) DETAILS OF THE DETECTABLE WARNING SURFACE ARE SHOWN IN THE CONSTRUCTION PLANS AND SHEET 608-001-8/12 OF THE STANDARD DRAWINGS.
- (C) IN ALTERATIONS WHERE EXISTING PHYSICAL CONSTRAINTS PREVENT COMPLIANCE TO PROVIDE A CURB RAMP FOR EACH PEDESTRIAN CROSSING A SINGLE DIAGONAL CURB RAMP SHALL BE PERMITTED TO SERVE BOTH PEDESTRIAN STREET CROSSINGS.
- (D) CONCRETE HEADER CURBS CONSTRUCTED AS PART OF THE CURB RAMP WILL BE CONSIDERED INCIDENTAL TO ITEM NUMBER 608004 AND NO SEPARATE PAYMENT WILL BE MADE.

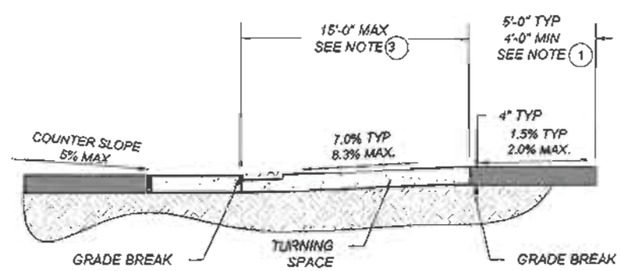

SECTION A-A
SCALE: NONE

NO.	DATE	REV. BY	DESCRIPTION
REVISIONS (OR CHANGE NOTICES)			

NEW MEXICO
DEPARTMENT OF TRANSPORTATION
STANDARD DRAWING

PERPENDICULAR
CURB RAMPS

APPROVED: DESIGN ENGINEER — DATE 1-13-15

608-001-2 — 608- 2 of 12

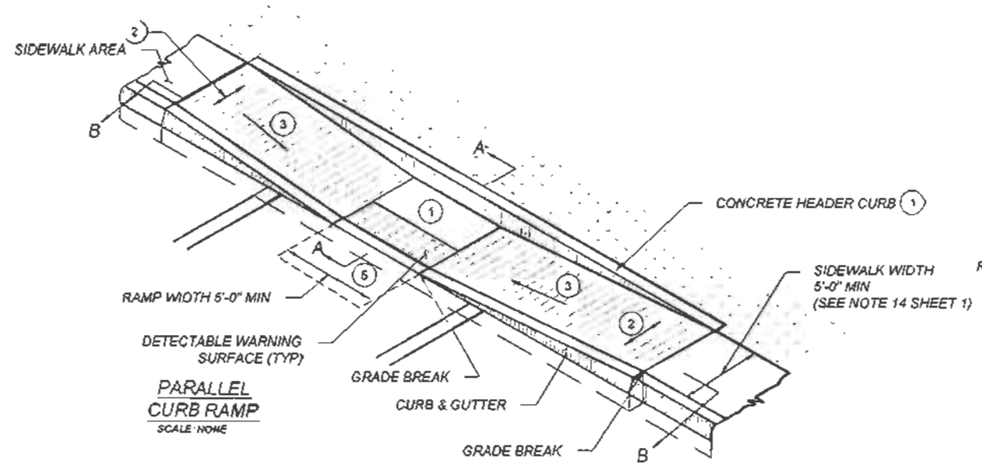

PARALLEL CURB RAMP
SCALE: NONE

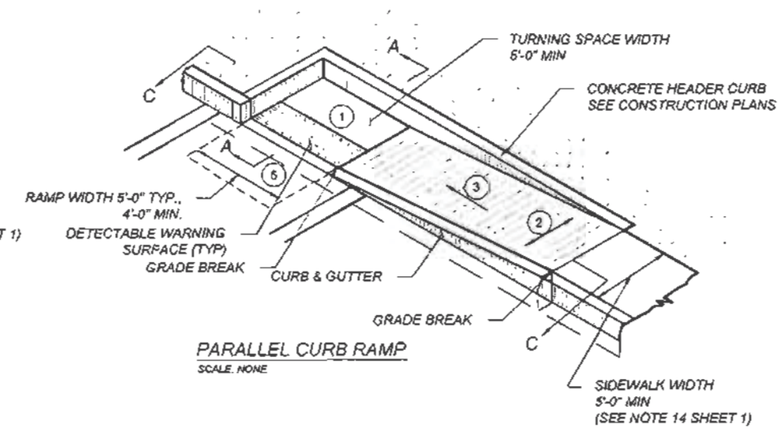

PARALLEL CURB RAMP
SCALE: NONE

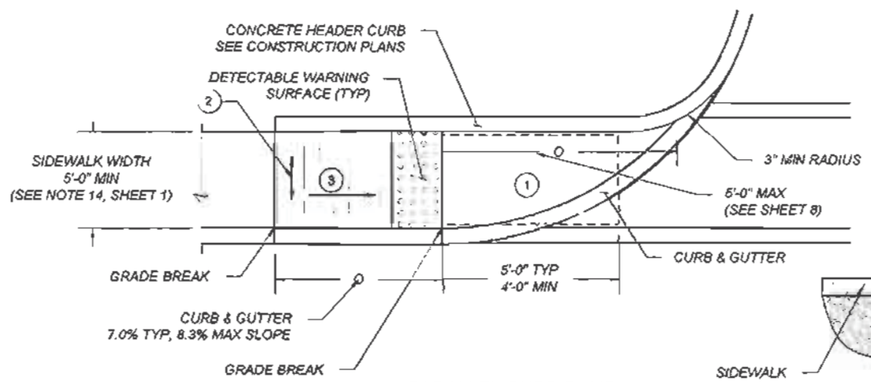

PARALLEL CURB RAMP
SCALE: NONE

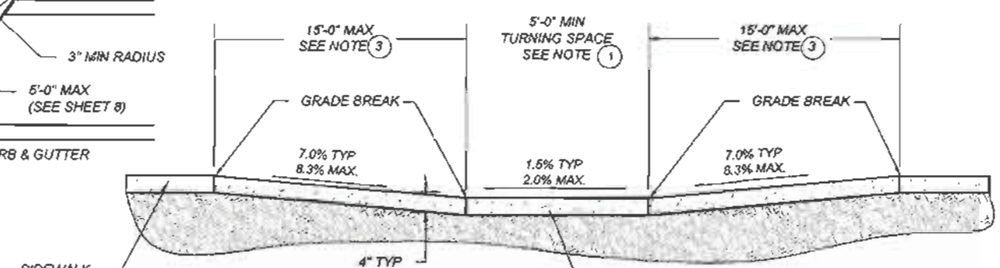

SECTION B-B
SCALE: NONE

KEYED NOTES

1. TURNING SPACE SHALL HAVE MAXIMUM CROSS SLOPE AND LONGITUDINAL SLOPE OF 2.0% (RECOMMEND 1.5%). TURNING SPACE SHALL BE 4.0 FT BY 4.0 FT MIN (RECOMMEND 5.0 FT BY 5.0 FT) AT THE TOP OF THE CURB RAMP AND SHALL BE PERMITTED TO OVERLAP OTHER TURNING SPACES AND CLEAR SPACES. WHERE THE TURNING SPACE IS CONSTRAINED AT THE BACK OF SIDEWALK, THE TURNING SPACE SHALL BE 4.0 FT MIN BY 5.0 FT MIN. THE 5.0 FT SHALL BE PROVIDED IN THE DIRECTION OF THE RAMP RUN.
2. CROSS SLOPE SHALL BE 2.0% MAX (RECOMMENDED 1.5%). EXCEPTION: THE CROSS SLOPE OF CURB RAMPS AT PEDESTRIAN STREET CROSSING WITHOUT YIELD OR STOP CONTROL, TRAFFIC SIGNALS DESIGNED FOR THE GREEN PHASE, AND AT MIDBLOCK PEDESTRIAN STREET CROSSING, THE CROSS SLOPE IS PERMITTED TO MATCH STREET OR HIGHWAY GRADE.
3. RUNNING SLOPE OF THE CURB RAMP SHALL BE 8.3 % MAX (RECOMMENDED 7.0%) BUT SHALL NOT REQUIRE THE RAMP LENGTH TO EXCEED 15.0 FT TO AVOID CHASING THE SLOPE INDEFINITELY WHEN CONNECTING TO STEEP GRADES. WHEN APPLYING THE 15 FOOT MAX LENGTH, THE RUNNING SLOPE OF THE CURB RAMP SHALL BE EXTENDED AS FLAT AS MAXIMUM EXTENT PRACTICABLE.
4. GRADE BREAKS AT THE TOP AND BOTTOM OF CURB RAMPS RUNS SHALL BE PERPENDICULAR TO THE DIRECTION OF THE RAMP RUN. GRADE BREAKS SHALL NOT BE PERMITTED ON THE SURFACE OF RAMP RUNS AND TURNING SPACE. SURFACE SLOPES THAT MEET AT GRADE BREAKS SHALL BE FLUSH.
5. COUNTER SLOPE OF THE GUTTER OR STREET AT THE FOOT OF A CURB RAMP, RUN OR TURNING SPACE SHALL BE 5% MAX.
6. FLARED SIDES ARE TO HAVE A SLOPE OF 10% MAX (RECOMMEND 9%), MEASURED PARALLEL TO THE BACK OF THE CURB, UNLESS THE FLARED SIDES ARE PROTECTED FROM CROSS TRAVEL BY LANDSCAPING, STREET FURNITURE, CHAINS, FENCING, OR RAILINGS.

NOTES:

- (A) DO NOT SCORE OR MAKE GROOVES IN SLOPED SURFACE. LINES SHOWN ON STANDARD DETAILS ARE FOR ILLUSTRATION ONLY.
- (B) DETAILS OF THE DETECTABLE WARNING SURFACE ARE SHOWN IN THE CONSTRUCTION PLANS AND SHEET 608-001-8/12 OF THE STANDARD DRAWINGS.
- (C) IN ALTERATIONS WHERE EXISTING PHYSICAL CONSTRAINTS PREVENT COMPLIANCE TO PROVIDE A CURB RAMP FOR EACH PEDESTRIAN CROSSING A SINGLE DIAGONAL CURB RAMP SHALL BE PERMITTED TO SERVE BOTH PEDESTRIAN STREET CROSSINGS.
- (D) CONCRETE HEADER CURBS CONSTRUCTED AS PART OF THE CURB RAMP WILL BE CONSIDERED INCIDENTAL TO ITEM NUMBER 608004 AND NO SEPARATE PAYMENT WILL BE MADE.

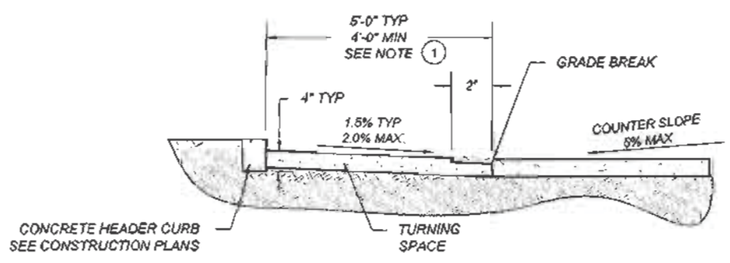

SECTION A-A
SCALE: NONE

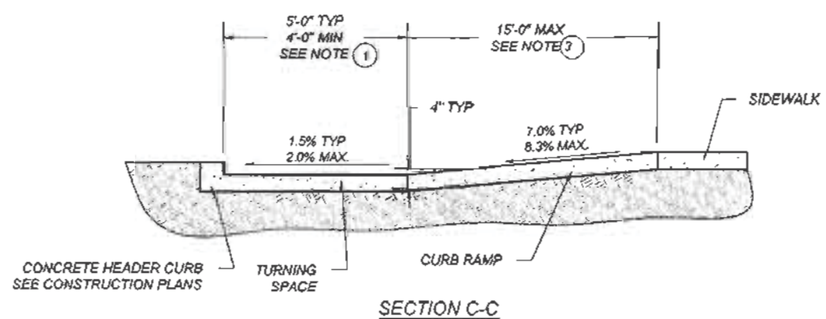

SECTION C-C
SCALE: NONE

MICHAEL J. SMELKER
NEW MEXICO
15350
LICENSED PROFESSIONAL ENGINEER
1-13-15

NO.	DATE	REV. BY	DESCRIPTION

REVISIONS (OR CHANGE NOTICES)

NEW MEXICO
DEPARTMENT OF TRANSPORTATION
STANDARD DRAWING

PARALLEL
CURB RAMPS

APPROVED: DESIGN ENGINEER — DATE 1-13-15

608-001-3 — 608- 3 of 12

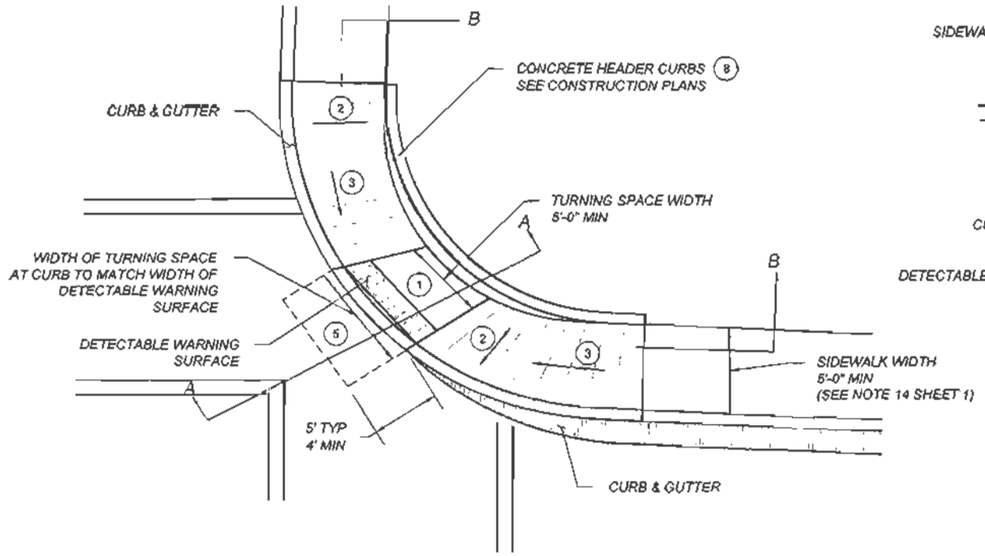

SINGLE DIAGONAL
PARALLAL CURB RAMP
SCALE: NONE

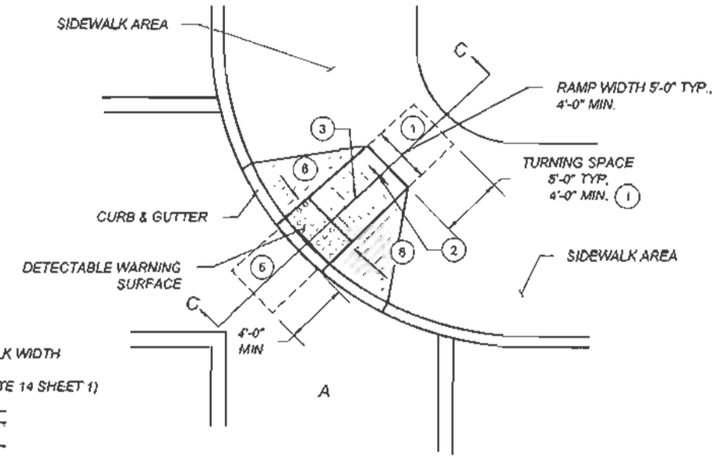

SINGLE DIAGONAL
PERPENDICULAR CURB RAMP
SCALE: NONE

KEYED NOTES

(1) TURNING SPACE SHALL HAVE MAXIMUM CROSS SLOPE AND LONGITUDINAL SLOPE OF 2.0% (RECOMMEND 1.5%). TURNING SPACE SHALL BE 4.0 FT BY 4.0 FT MIN (RECOMMEND 5.0 FT BY 5.0 FT) AT THE TOP OF THE CURB RAMP AND SHALL BE PERMITTED TO OVERLAP OTHER TURNING SPACES AND CLEAR SPACES. WHERE THE TURNING SPACE IS CONSTRAINED AT THE BACK OF SIDEWALK, THE TURNING SPACE SHALL BE 4.0 FT MIN BY 5.0 FT MIN. THE 5.0 FT SHALL BE PROVIDED IN THE DIRECTION OF THE RAMP RUN.

(2) CROSS SLOPE SHALL BE 2.0% MAX (RECOMMENDED 1.5%). EXCEPTION: THE CROSS SLOPE OF CURB RAMPS AT PEDESTRIAN STREET CROSSING WITHOUT YIELD OR STOP CONTROL, TRAFFIC SIGNALS DESIGNED FOR THE GREEN PHASE, AND AT MIDBLOCK PEDESTRIAN STREET CROSSING, THE CROSS SLOPE IS PERMITTED TO MATCH STREET OR HIGHWAY GRADE.

(3) RUNNING SLOPE OF THE CURB RAMP SHALL BE 8.3 % MAX (RECOMMENDED 7.0%) BUT SHALL NOT REQUIRE THE RAMP LENGTH TO EXCEED 15.0 FT TO AVOID CHASING THE SLOPE INDEFINITELY WHEN CONNECTING TO STEEP GRADES. WHEN APPLYING THE 15 FOOT MAX LENGTH, THE RUNNING SLOPE OF THE CURB RAMP SHALL BE EXTENDED AS FLAT AS MAXIMUM EXTENT PRACTICABLE.

(4) GRADE BREAKS AT THE TOP AND BOTTOM OF CURB RAMPS RUNS SHALL BE PERPENDICULAR TO THE DIRECTION OF THE RAMP RUN. GRADE BREAKS SHALL NOT BE PERMITTED ON THE SURFACE OF RAMP RUNS AND TURNING SPACE. SURFACE SLOPES THAT MEET AT GRADE BREAKS SHALL BE FLUSH.

(5) COUNTER SLOPE OF THE GUTTER OR STREET AT THE FOOT OF A CURB RAMP, RUN OR TURNING SPACE SHALL BE 5% MAX.

(6) FLARED SIDES ARE TO HAVE A SLOPE OF 10% MAX (RECOMMEND 9%), MEASURED PARALLEL TO THE BACK OF THE CURB, UNLESS THE FLARED SIDES ARE PROTECTED FROM CROSS TRAVEL BY LANDSCAPING, STREET FURNITURE, CHAINS, FENCING, OR RAILINGS.

NOTES:

(A) DO NOT SCORE OR MAKE GROOVES IN SLOPED SURFACE. LINES SHOWN ON STANDARD DETAILS ARE FOR ILLUSTRATION ONLY.

(B) DETAILS OF THE DETECTABLE WARNING SURFACE ARE SHOWN IN THE CONSTRUCTION PLANS AND SHEET 608-001-9/12 OF THE STANDARD DRAWINGS.

(C) IN ALTERATIONS WHERE EXISTING PHYSICAL CONSTRAINTS PREVENT COMPLIANCE TO PROVIDE A CURB RAMP FOR EACH PEDESTRIAN CROSSING A SINGLE DIAGONAL CURB RAMP SHALL BE PERMITTED TO SERVE BOTH PEDESTRIAN STREET CROSSINGS.

(D) CONCRETE HEADER CURBS CONSTRUCTED AS PART OF THE CURB RAMP WILL BE CONSIDERED INCIDENTAL TO ITEM NUMBER 608004 AND NO SEPARATE PAYMENT WILL BE MADE.

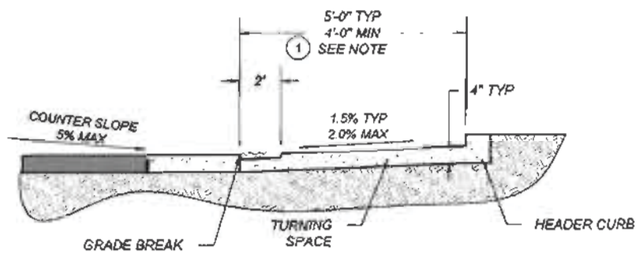

SECTION A-A
SCALE: NONE

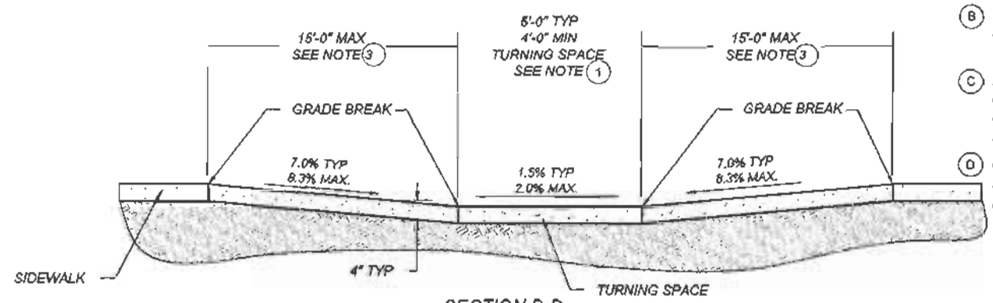

SECTION B-B
SCALE: NONE

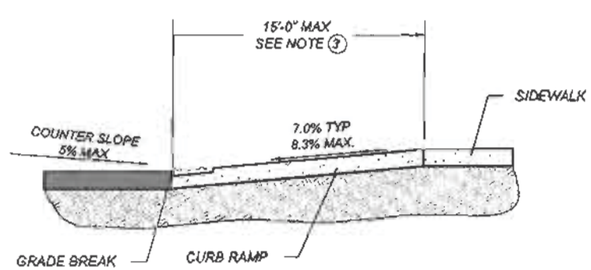

SECTION C-C
SCALE: NONE

MICHAEL J. SMELKER
NEW MEXICO
15350
LICENSED PROFESSIONAL ENGINEER
7-13-15

NO.	DATE	REV. BY	DESCRIPTION
REVISIONS (OR CHANGE NOTICES)			

NEW MEXICO
DEPARTMENT OF TRANSPORTATION
STANDARD DRAWING

DIAGONAL
CURB RAMPS

APPROVED: DESIGN ENGINEER — DATE 7-13-15

608-001-4 — 608-4 of 12

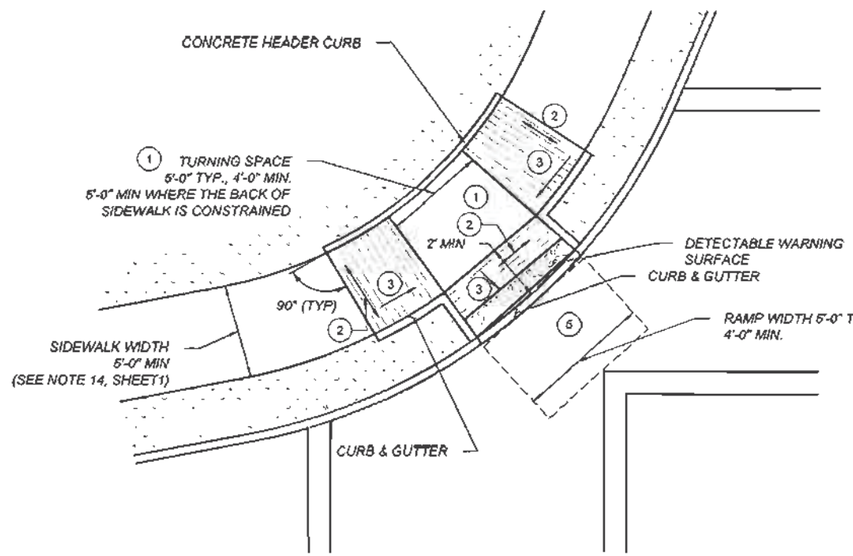

COMBINATION CURB RAMP (A)
DIAGONAL
SCALE: NONE

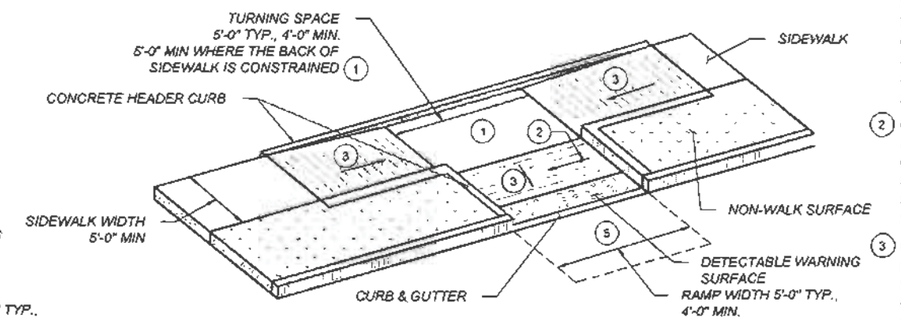

COMBINATION CURB RAMP (B)
SCALE: NONE

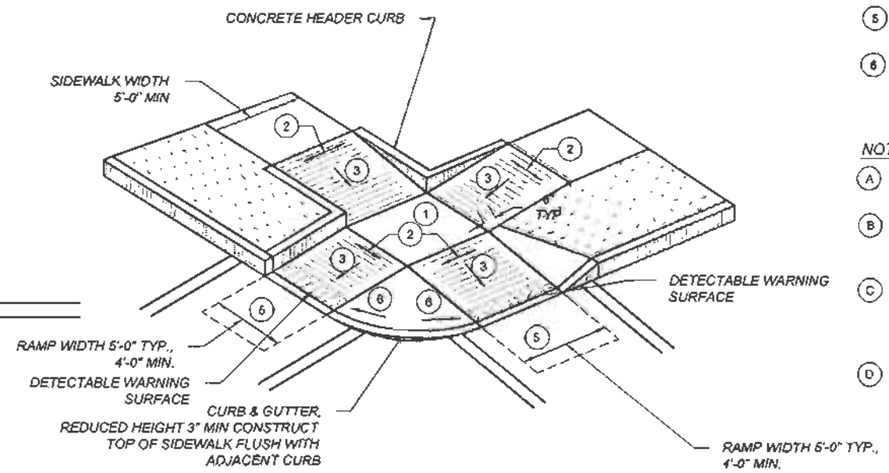

COMBINATION CURB RAMP (D)
WITH SHARED TURNING SPACE
SCALE: NONE

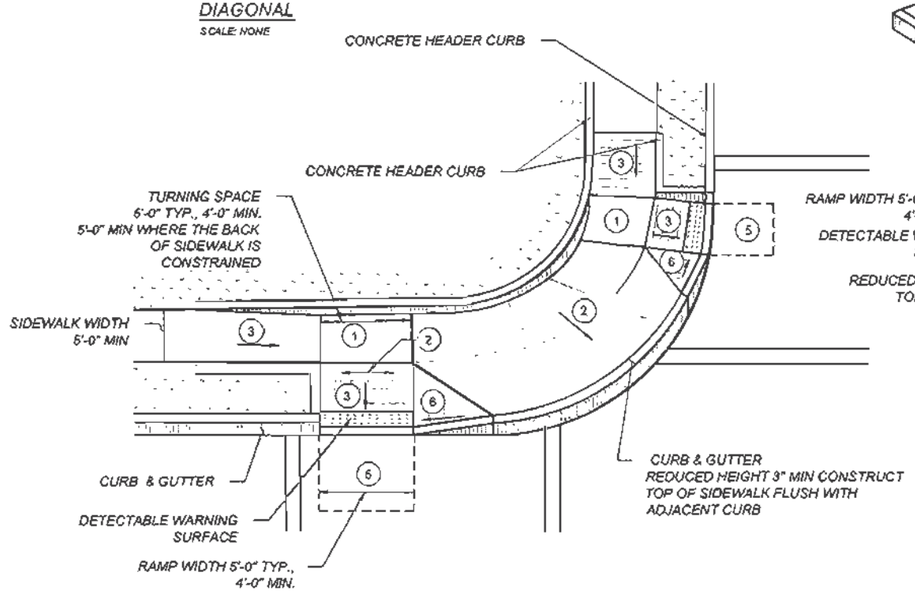

COMBINATION CURB RAMP (C)
SCALE: NONE

KEYED NOTES

1. TURNING SPACE SHALL HAVE MAXIMUM CROSS SLOPE AND LONGITUDINAL SLOPE OF 2.0% (RECOMMEND 1.5%). TURNING SPACE SHALL BE 4.0 FT BY 4.0 FT MIN (RECOMMEND 5.0 FT BY 5.0 FT) AT THE TOP OF THE CURB RAMP AND SHALL BE PERMITTED TO OVERLAP OTHER TURNING SPACES AND CLEAR SPACES. WHERE THE TURNING SPACE IS CONSTRAINED AT THE BACK OF SIDEWALK, THE TURNING SPACE SHALL BE 4.0 FT MIN BY 5.0 FT MIN. THE 5.0 FT SHALL BE PROVIDED IN THE DIRECTION OF THE RAMP RUN.
2. CROSS SLOPE SHALL BE 2.0% MAX (RECOMMENDED 1.5%) EXCEPTION: THE CROSS SLOPE OF CURB RAMPS AT PEDESTRIAN STREET CROSSING WITHOUT YIELD OR STOP CONTROL, TRAFFIC SIGNALS DESIGNED FOR THE GREEN PHASE, AND AT MIDBLOCK PEDESTRIAN STREET CROSSING, THE CROSS SLOPE IS PERMITTED TO MATCH STREET OR HIGHWAY GRADE.
3. RUNNING SLOPE OF THE CURB RAMP SHALL BE 8.3 % MAX (RECOMMENDED 7.0%) BUT SHALL NOT REQUIRE THE RAMP LENGTH TO EXCEED 15.0 FT TO AVOID CHASING THE SLOPE INDEFINITELY WHEN CONNECTING TO STEEP GRADES. WHEN APPLYING THE 15 FOOT MAX LENGTH, THE RUNNING SLOPE OF THE CURB RAMP SHALL BE EXTENDED AS FLAT AS MAXIMUM EXTENT PRACTICABLE.
4. GRADE BREAKS AT THE TOP AND BOTTOM OF CURB RAMPS RUNS SHALL BE PERPENDICULAR TO THE DIRECTION OF THE RAMP RUN. GRADE BREAKS SHALL NOT BE PERMITTED ON THE SURFACE OF RAMP RUNS AND TURNING SPACE. SURFACE SLOPES THAT MEET AT GRADE BREAKS SHALL BE FLUSH.
5. COUNTER SLOPE OF THE GUTTER OR STREET AT THE FOOT OF A CURB RAMP, RUN OR TURNING SPACE SHALL BE 5% MAX.
6. FLARED SIDES ARE TO HAVE A SLOPE OF 10% MAX (RECOMMEND 9%), MEASURED PARALLEL TO THE BACK OF THE CURB, UNLESS THE FLARED SIDES ARE PROTECTED FROM CROSS TRAVEL BY LANDSCAPING, STREET FURNITURE, CHAINS, FENCING, OR RAILINGS.

NOTES:

- (A) DO NOT SCORE OR MAKE GROOVES IN SLOPED SURFACE. LINES SHOWN ON STANDARD DETAILS ARE FOR ILLUSTRATION ONLY.
- (B) DETAILS OF THE DETECTABLE WARNING SURFACE ARE SHOWN IN THE CONSTRUCTION PLANS AND SHEET 608-001-8/12 OF THE STANDARD DRAWINGS.
- (C) IN ALTERATIONS WHERE EXISTING PHYSICAL CONSTRAINTS PREVENT COMPLIANCE TO PROVIDE A CURB RAMP FOR EACH PEDESTRIAN CROSSING A SINGLE DIAGONAL CURB RAMP SHALL BE PERMITTED TO SERVE BOTH PEDESTRIAN STREET CROSSINGS.
- (D) CONCRETE HEADER CURBS CONSTRUCTED AS PART OF THE CURB RAMP WILL BE CONSIDERED INCIDENTAL TO ITEM NUMBER 608604 AND NO SEPARATE PAYMENT WILL BE MADE.

MICHAEL J. SMELKER
NEW MEXICO
15350
LICENSED PROFESSIONAL ENGINEER
1-13-15

NO.	DATE	REV. BY	DESCRIPTION
REVISIONS (OR CHANGE NOTICES)			

NEW MEXICO
DEPARTMENT OF TRANSPORTATION
STANDARD DRAWING

COMBINATION
CURB RAMPS

APPROVED: DESIGN ENGINEER — DATE 1-13-15

608-001-5

DRAWING SCALE = NOT TO SCALE

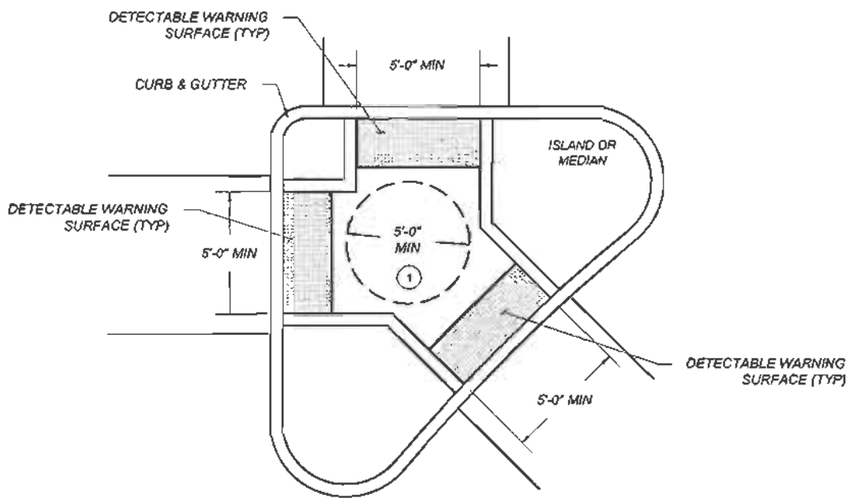

PEDESTRIAN REFUGE ISLAND CURB RAMP

SCALE NONE

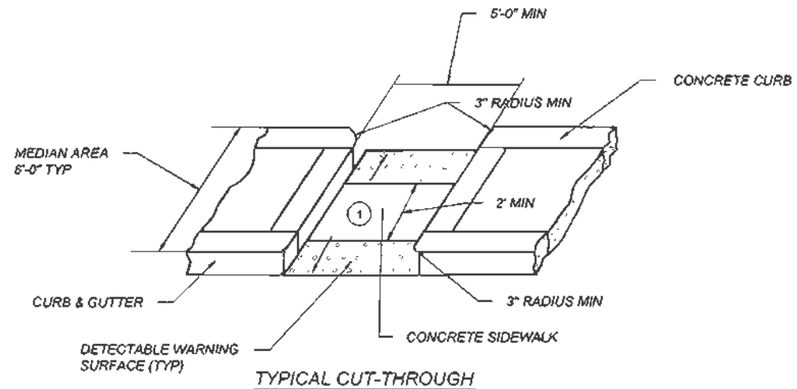

TYPICAL CUT-THROUGH PEDESTRIAN REFUGE ISLAND OPENING WITH CURB SIDES

SCALE NONE

KEYED NOTES

1. TURNING SPACE SHALL HAVE MAXIMUM CROSS SLOPE AND LONGITUDINAL SLOPE OF 2.0% (RECOMMEND 1.5%). TURNING SPACE SHALL BE 4.0 FT BY 4.0 FT MIN (RECOMMEND 5.0 FT BY 5.0 FT) AT THE TOP OF THE CURB RAMP AND SHALL BE PERMITTED TO OVERLAP OTHER TURNING SPACES AND CLEAR SPACES. WHERE THE TURNING SPACE IS CONSTRAINED AT THE BACK OF SIDEWALK, THE TURNING SPACE SHALL BE 4.0 FT MIN BY 5.0 FT MIN. THE 5.0 FT SHALL BE PROVIDED IN THE DIRECTION OF THE RAMP RUN.
2. CROSS SLOPE SHALL BE 2.0% MAX (RECOMMENDED 1.5%). EXCEPTION: THE CROSS SLOPE OF CURB RAMPS AT PEDESTRIAN STREET CROSSING WITHOUT YIELD OR STOP CONTROL, TRAFFIC SIGNALS DESIGNED FOR THE GREEN PHASE, AND AT MIDBLOCK PEDESTRIAN STREET CROSSING, THE CROSS SLOPE IS PERMITTED TO MATCH STREET OR HIGHWAY GRADE.
3. RUNNING SLOPE OF THE CURB RAMP SHALL BE 8.3 % MAX (RECOMMENDED 7.0%) BUT SHALL NOT REQUIRE THE RAMP LENGTH TO EXCEED 15.0 FT TO AVOID CHASING THE SLOPE INDEFINITELY WHEN CONNECTING TO STEEP GRADES. WHEN APPLYING THE 15 FOOT MAX LENGTH, THE RUNNING SLOPE OF THE CURB RAMP SHALL BE EXTENDED AS FLAT AS MAXIMUM EXTENT PRACTICABLE.
4. GRADE BREAKS AT THE TOP AND BOTTOM OF CURB RAMPS RUNS SHALL BE PERPENDICULAR TO THE DIRECTION OF THE RAMP RUN. GRADE BREAKS SHALL NOT BE PERMITTED ON THE SURFACE OF RAMP RUNS AND TURNING SPACE. SURFACE SLOPES THAT MEET AT GRADE BREAKS SHALL BE FLUSH.
5. COUNTER SLOPE OF THE GUTTER OR STREET AT THE FOOT OF A CURB RAMP, RUN OR TURNING SPACE SHALL BE 5% MAX.
6. FLARED SIDES ARE TO HAVE A SLOPE OF 10% MAX (RECOMMEND 9%), MEASURED PARALLEL TO THE BACK OF THE CURB, UNLESS THE FLARED SIDES ARE PROTECTED FROM CROSS TRAVEL BY LANDSCAPING, STREET FURNITURE, CHAINS, FENCING, OR RAILINGS.

NOTES:

- (A) DO NOT SCORE OR MAKE GROOVES IN SLOPED SURFACE. LINES SHOWN ON STANDARD DETAILS ARE FOR ILLUSTRATION ONLY.
- (B) DETAILS OF THE DETECTABLE WARNING SURFACE ARE SHOWN IN THE CONSTRUCTION PLANS AND SHEET 608-001-3/12 OF THE STANDARD DRAWINGS.
- (C) IN ALTERATIONS WHERE EXISTING PHYSICAL CONSTRAINTS PREVENT COMPLIANCE TO PROVIDE A CURB RAMP FOR EACH PEDESTRIAN CROSSING A SINGLE DIAGONAL CURB RAMP SHALL BE PERMITTED TO SERVE BOTH PEDESTRIAN STREET CROSSINGS.
- (D) CONCRETE HEADER CURBS CONSTRUCTED AS PART OF THE CURB RAMP WILL BE CONSIDERED INCIDENTAL TO ITEM NUMBER 608004 AND NO SEPARATE PAYMENT WILL BE MADE.

MICHAEL J. SMELKER
NEW MEXICO
15350
LICENSED PROFESSIONAL ENGINEER
1-13-15

NO.	DATE	REV. BY	DESCRIPTION

REVISIONS (OR CHANGE NOTICES)

NEW MEXICO
DEPARTMENT OF TRANSPORTATION
STANDARD DRAWING

PEDESTRIAN REFUGE ISLAND

APPROVED DESIGN ENGINEER — DATE

608-001-6 — 608- 6 of 12

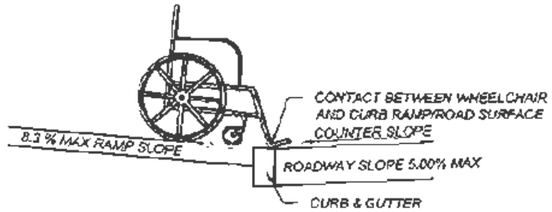

ALGEBRAIC DIFFERENCES BETWEEN ROADWAY SLOPE AND CURB RAMP SLOPE GREATER THAN 13.3% NOT PERMITTED.

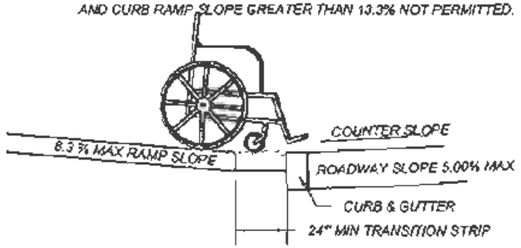

PROVIDE A 24" MIN TRANSITION STRIP IF ALGEBRAIC DIFFERENCES BETWEEN ROADWAY SLOPE AND CURB RAMP SLOPE ARE GREATER THAN 13.33%. TRANSITION STRIP SLOPE NOT TO EXCEED 5.00%

CHANGE OF GRADE LIMITATIONS

SCALE: NONE

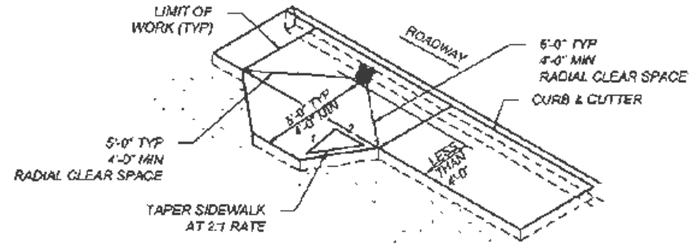

SIDEWALK ADDITION DUE TO OBSTRUCTIONS

SCALE: NONE

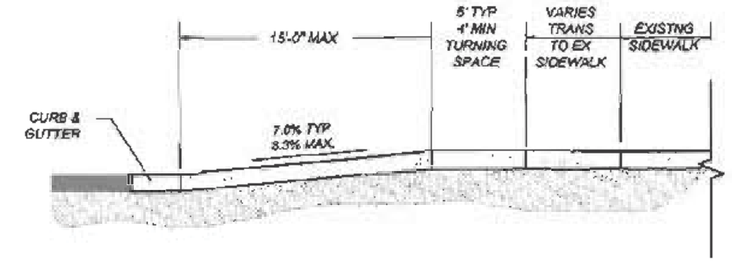

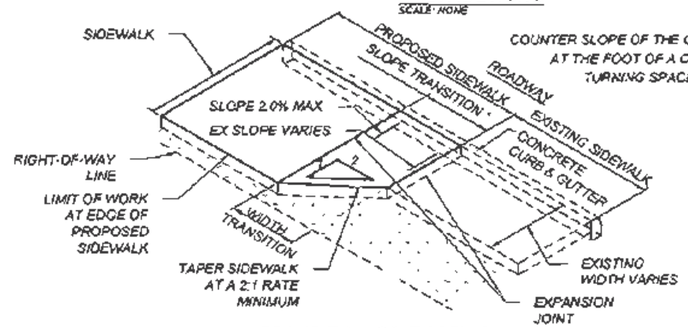

TRANSITION TO EXISTING SIDEWALK DETAIL

SCALE: NONE

COUNTER SLOPE OF THE GUTTER OR STREET AT THE FOOT OF A CURB RAMP, RUN OR TURNING SPACE SHALL BE 5% MAX.

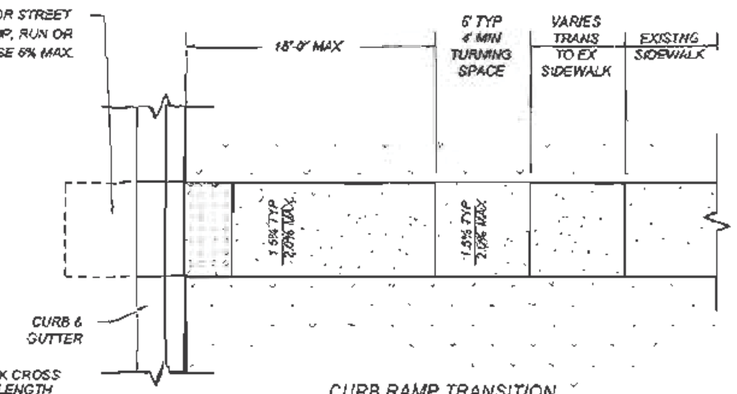

CURB RAMP TRANSITION TO EXISTING SIDEWALK DETAIL

MINIMUM SLOPE TRANSITION LENGTH BASED ON THE DIFFERENCE OF PROPOSED SIDEWALK CROSS SLOPE AND EXISTING SIDEWALK CROSS SLOPE AT THE LOCATION OF TIE IN. THIS MINIMUM LENGTH TO BE DETERMINED BY THE FOLLOWING FORMULA: DELTA % SLOPE X 0.6' OR MIN WIDTH OF 1 FT.

THE MINIMUM WIDTH TRANSITION SHALL BE CALCULATED USING THE FOLLOWING FORMULA:CHANGE IN WIDTH X 2.

DEPENDING ON WHICH IS LONGEST, EITHER THE SLOPE TRANSITION OR WIDTH TRANSITION WILL CONTROL THE LENGTH OF SIDEWALK TRANSITION.

TRANSITION AREAS SERVE AS TEMPORARY CONNECTIONS OF THE PEDESTRIAN ACCESS ROUTE. FUTURE IMPROVEMENTS TO THE REMAINING PORTION OF EXISTING SIDEWALK SHALL INCLUDE REMOVING THE TRANSITION AREA AND CONSTRUCTING A FULLY COMPLIANT SIDEWALK.

RAMP CROSS SLOPE TRANSITION TO MATCH ROADWAY PROFILE SLOPE

* SLOPES SHOWN ARE FOR ILLUSTRATION ONLY.

NOTE:

1) CROSS SLOPE OF CURB RAMP AT PEDESTRIAN STREET CROSSING WITHOUT YIELD OR STOP CONTROL, AND AT MID BLOCK PEDESTRIAN STREET CROSSING, THE CROSS SLOPE ARE PERMITTED TO EQUAL THE STREET OR HIGHWAY GRADE.

2) CROSS SLOPE IF CURB RAMP IS AT YIELD OR STOP CONTROL REQUIRES 2% MAX CROSS SLOPE AT CURB LINE

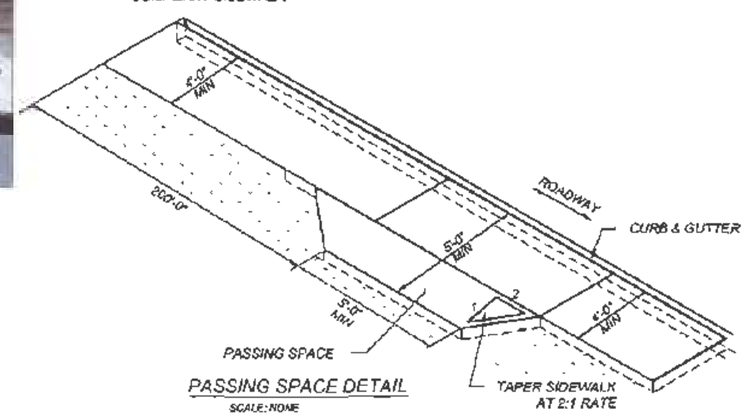

PASSING SPACE DETAIL

SCALE: NONE

1 WHERE THE CLEAR WIDTH OF PEDESTRIAN ACCESS ROUTES IS GREATER THAN 4ft AND LESS THAN 5ft, PASSING SPACES SHALL BE PROVIDED AT INTERVALS 200ft MAXIMUM.

2 PASSING SPACES ARE PERMITTED TO OVERLAP PEDESTRIAN ACCESS ROUTES.

MICHAEL J. SMELKER
NEW MEXICO
15350
LICENSED PROFESSIONAL ENGINEER
1-13-15

NO.	DATE	REV. BY	DESCRIPTION
PREVIOUS FOR CHANGE NOTICES			

NEW MEXICO
DEPARTMENT OF TRANSPORTATION
STANDARD DRAWING

CURB RAMP AND SIDEWALK TRANSITION DETAILS

APPROVED: DIRECTOR ENGINEER — DATE: 1-13-15

608-001-7

608- 7 of 12

DRAWING SCALE = NOT TO SCALE

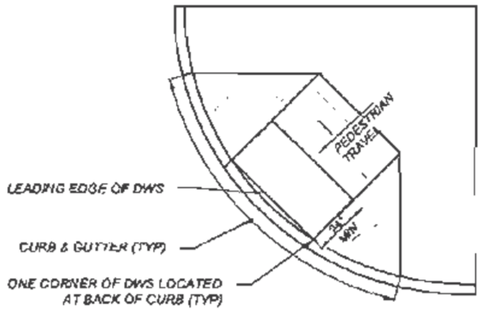

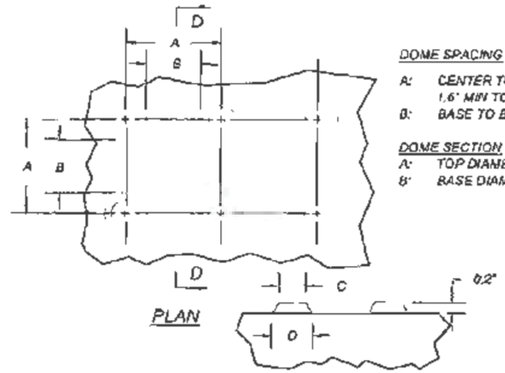

PLAN

SECTION D-D

DOME SPACING

A: CENTER TO CENTER SPACING 1.6" MIN TO 2.4" MAX

B: BASE TO BASE SPACING 0.65" MIN

DOME SECTION

A: TOP DIAMETER 50%-65% OF D

B: BASE DIAMETER 0.9" TO 1.4" MAX

DETECTABLE WARNING SURFACE (DWS) TRUNCATED DOME DETAILS

SCALE: NONE

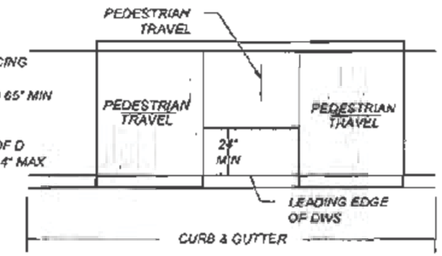

DETECTABLE WARNING SURFACE

SCALE: NONE

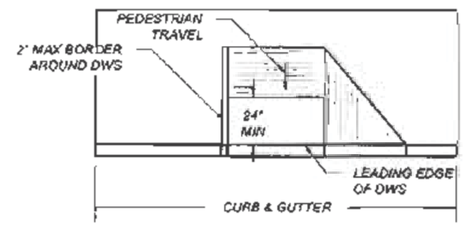

DETECTABLE WARNING SURFACE

SCALE: NONE

DETECTABLE WARNING SURFACE (DWS).

A STANDARDIZED TRUNCATED DOME GRID SURFACE BUILT IN OR APPLIED TO THE PEDESTRIAN ACCESS ROUTE TO WARN VISUALLY IMPAIRED PEOPLE OF HAZARDS. THE SURFACE IS PLACED WHERE DETECTABLE WARNING SURFACE (DWS): A STANDARDIZED TRUNCATED DOME GRID SURFACE BUILT IN OR APPLIED TO THE PEDESTRIAN ACCESS ROUTE TO WARN VISUALLY IMPAIRED PEOPLE OF HAZARDS. THE SURFACE IS PLACED WHERE PEDESTRIANS WILL ENCOUNTER THE PRESENCE OF HAZARDS IN THE LINE OF TRAVEL, SUCH AS THE EDGE OF ROADWAY AND AT-GRADE RAIL CROSSINGS, INDICATING THEY SHOULD STOP AND DETERMINE THE NATURE OF THE HAZARD BEFORE PROCEEDING.

LOCATION:

1. THE DETECTABLE WARNING SURFACE (DWS) SHALL BE 2.0 FT MINIMUM WIDTH AND EXTENDED THE FULL WIDTH OF THE CURB RAMP RUN, TURNING SPACE, BLENDED TRANSITION, AN EXCLUDING ANY THE FLARED SIDES
2. THE ROWS OF TRUNCATED DOMES SHALL BE ALIGNED TO BE PERPENDICULAR TO THE GRADE BREAK AT THE BACK OF THE CURB.
3. THE ROWS OF TRUNCATED DOMES SHALL BE ALIGNED TO BE PARALLEL TO THE DIRECTION OF TRAVEL.
4. IF CURB AND GUTTER ARE NOT PRESENT, SUCH AS A SHARED-USE PATH CONNECTION, THE DETECTABLE WARNING SURFACE SHALL BE PLACED AT THE PAVEMENT EDGE.
5. PEDESTRIAN REFUGE ISLANDS SHALL HAVE DETECTABLE WARNINGS. DETECTABLE WARNINGS AT CUT THROUGH ISLANDS SHALL BE SEPARATED BY A 24 INCH MINIMUM LENGTH OF THE WALKWAY WITHOUT MARKINGS.

EXCEPTION: DETECTABLE WARNINGS SHALL NOT BE REQUIRED ON CUT THROUGH ISLANDS WHERE THE CROSSING IS LESS THAN 6 FT IN THE DIRECTION OF PEDESTRIAN TRAVEL.

NOTES:

1. DETAILS SPECIFIED ON THIS PLAN APPLY TO ALL CONSTRUCTION OR RECONSTRUCTION OF STREETS, CURBS, OR SIDEWALKS BY ALL PUBLIC AGENCIES AND BY ALL PRIVATE ORGANIZATIONS CONSTRUCTING FACILITIES FOR PUBLIC USE.
2. DETECTABLE WARNING SURFACE SHALL CONTRAST VISUALLY WITH ADJACENT GUTTER, WALKWAY SURFACES, EITHER LIGHT-ON-DARK OR DARK-ON-LIGHT FOR THE FULL WIDTH OF RAMP.
3. ALL PRODUCTS USED FOR DETECTABLE WARNING SURFACES SHALL BE ON THE DEPARTMENT'S APPROVED PRODUCT LIST.

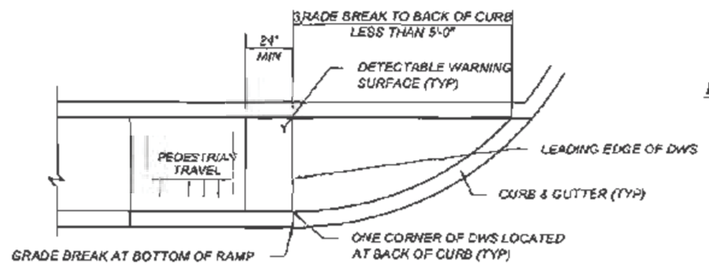

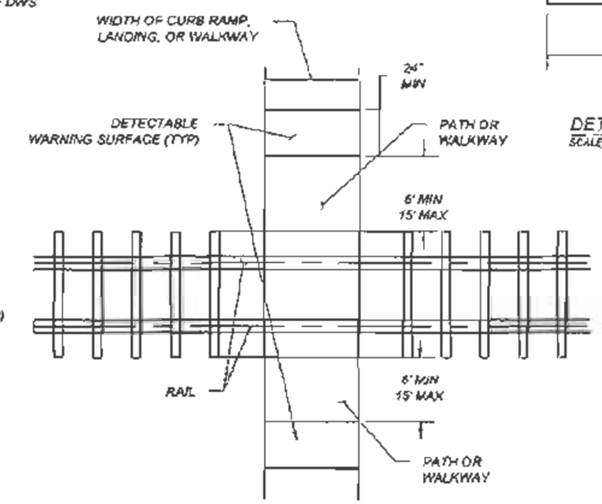

PEDESTRIAN AT-GRADE RAIL CROSSINGS

SCALE: NONE

DETECTABLE WARNING SURFACE

SCALE: NONE

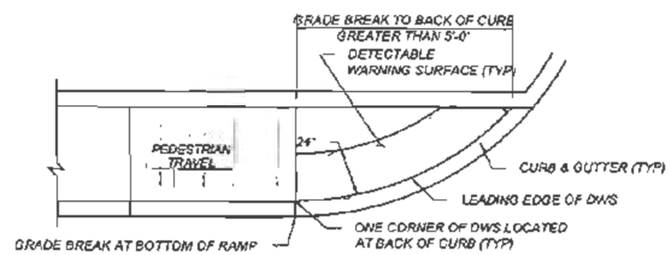

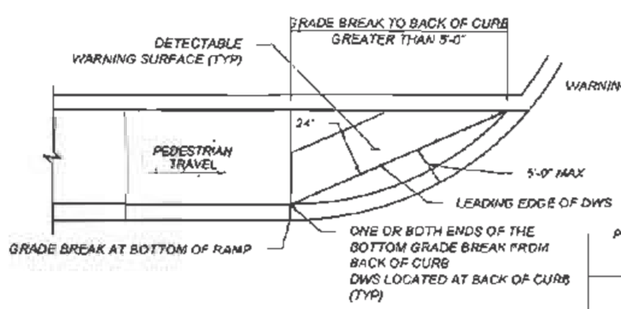

DETECTABLE WARNING SURFACE (DWS)ON CURVED SURFACES

SCALE: NONE

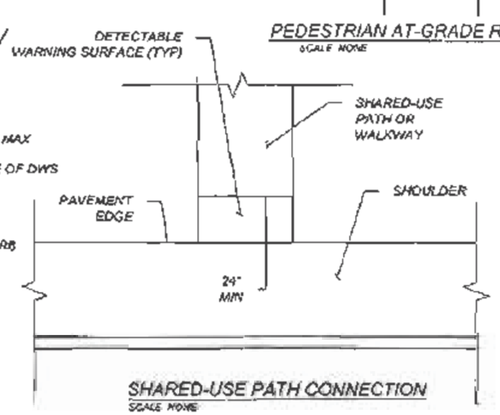

SHARED-USE PATH CONNECTION

SCALE: NONE

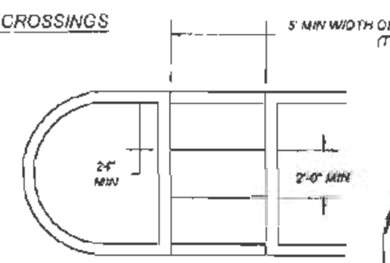

MEDIAN CUT-THROUGH

SCALE: NONE

EXCEPTION: IF THE LENGTH BETWEEN TWO DWS SURFACE IS LESS THAN 2' THEN DETECTABLE WARNING SURFACE WILL NOT BE INSTALLED

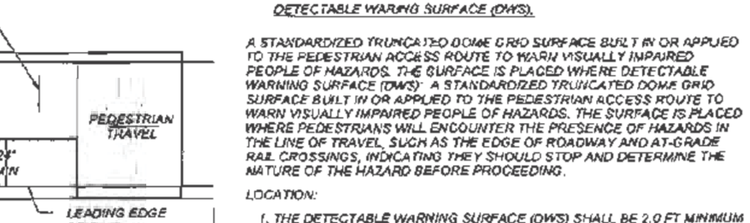

DETECTABLE WARNING SURFACE

SCALE: NONE

MICHAEL J. SMELKER
NEW MEXICO
15350
LICENSED PROFESSIONAL ENGINEER
1-13-15

NO.	DATE	REV. BY	DESCRIPTION

REVISIONS (OR CHANGE NOTICES)

NEW MEXICO
DEPARTMENT OF TRANSPORTATION
STANDARD DRAWING

DETECTABLE WARNING SURFACE

APPROVED: [signature] CHIEF ENGINEER — 1-13-15 DATE

608-001-8

608-8 of 12

DRAWING SCALE = NOT TO SCALE

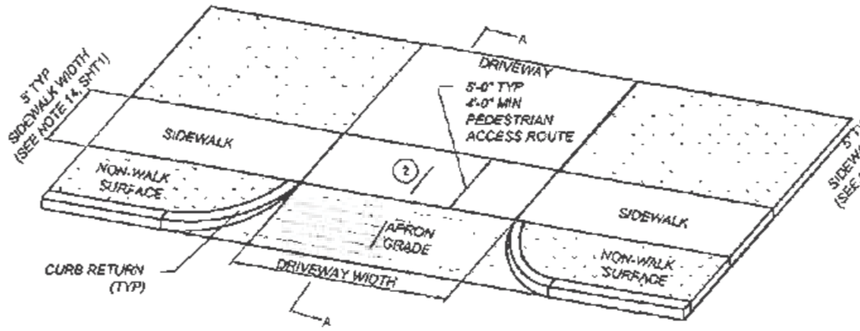

TYPE 2
DRIVEWAY APRON
SCALE: NONE

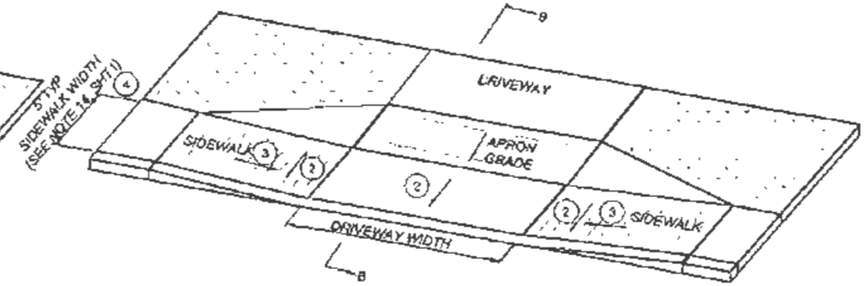

TYPE 3A
DRIVEWAY APRON
SCALE: NONE

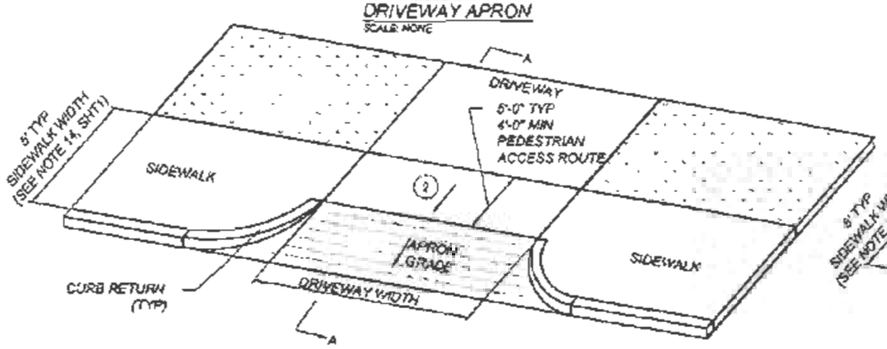

TYPE 2A
DRIVEWAY APRON
SCALE: NONE

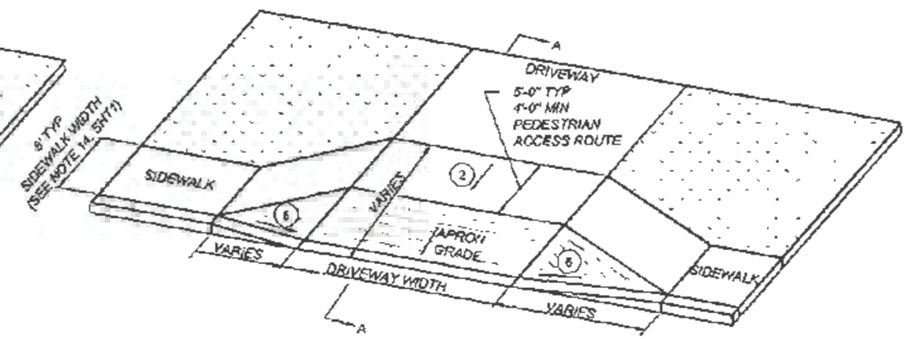

TYPE 2C
DRIVEWAY APRON
SCALE: NONE

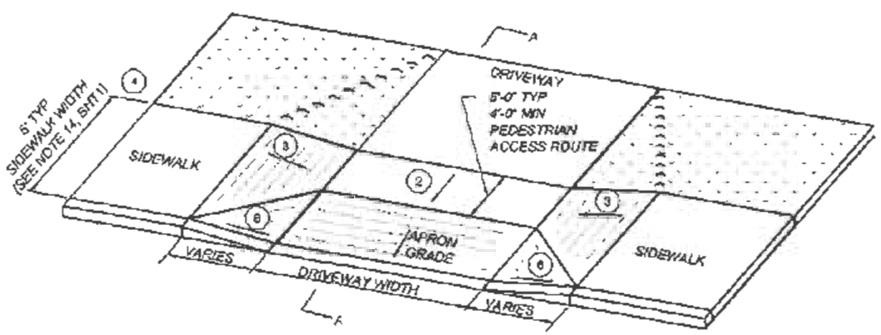

TYPE 2B
DRIVEWAY APRON
SCALE: NONE

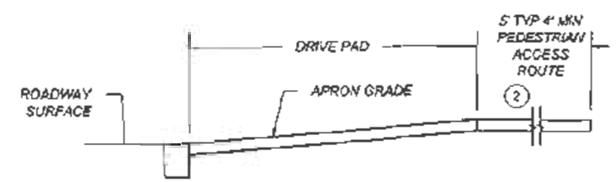

SECTION A-A
SCALE: NONE

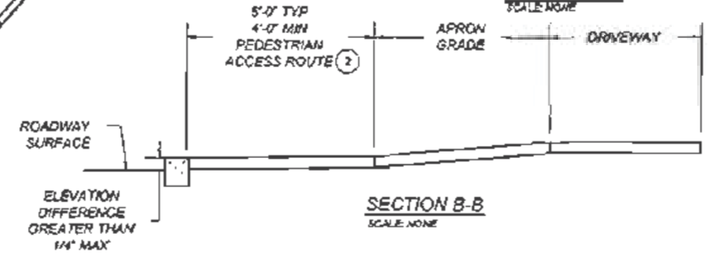

SECTION B-B
SCALE: NONE

KEYED NOTES

1. TURNING SPACE SHALL HAVE MAXIMUM CROSS SLOPE AND LONGITUDINAL SLOPE OF 2.0% (RECOMMEND 1.5%). TURNING SPACE SHALL BE 4.0 FT BY 4.0 FT MIN (RECOMMEND 5.0 FT BY 5.0 FT) AT THE TOP OF THE CURB RAMP AND SHALL BE PERMITTED TO OVERLAP OTHER TURNING SPACES AND CLEAR SPACES. WHERE THE TURNING SPACE IS CONSTRAINED AT THE BACK OF SIDEWALK, THE TURNING SPACE SHALL BE 4.0 FT MIN BY 5.0 FT MIN. THE 5.0 FT SHALL BE PROVIDED IN THE DIRECTION OF THE RAMP RUN.
2. CROSS SLOPE SHALL BE 2.0% MAX (RECOMMENDED 1.5%). EXCEPTION: THE CROSS SLOPE OF CURB RAMPS AT PEDESTRIAN STREET CROSSING WITHOUT YIELD OR STOP CONTROL, TRAFFIC SIGNALS DESIGNED FOR THE GREEN PHASE, AND AT MIDBLOCK PEDESTRIAN STREET CROSSING, THE CROSS SLOPE IS PERMITTED TO MATCH STREET OR HIGHWAY GRADE.
3. RUNNING SLOPE OF THE CURB RAMP SHALL BE 8.3 % MAX (RECOMMENDED 7.0%) BUT SHALL NOT REQUIRE THE RAMP LENGTH TO EXCEED 15.0 FT TO AVOID CHASING THE SLOPE INDEFINITELY WHEN CONNECTING TO STEEP GRADES. WHEN APPLYING THE 15 FOOT MAX LENGTH, THE RUNNING SLOPE OF THE CURB RAMP SHALL BE EXTENDED AS FLAT AS MAXIMUM EXTENT PRACTICABLE
4. GRADE BREAKS AT THE TOP AND BOTTOM OF CURB RAMPS RUNS SHALL BE PERPENDICULAR TO THE DIRECTION OF THE RAMP RUN. GRADE BREAKS SHALL NOT BE PERMITTED ON THE SURFACE OF RAMP RUNS AND TURNING SPACE. SURFACE SLOPES THAT MEET AT GRADE BREAKS SHALL BE FLUSH.
5. COUNTER SLOPE OF THE GUTTER OR STREET AT THE FOOT OF A CURB RAMP, RUN OR TURNING SPACE SHALL BE 5% MAX.
6. FLARED SIDES ARE TO HAVE A SLOPE OF 10% MAX (RECOMMEND 9%) MEASURED PARALLEL TO THE BACK OF THE CURB, UNLESS THE FLARED SIDES ARE PROTECTED FROM CROSS TRAVEL BY LANDSCAPING, STREET FURNITURE, CHAINS, FENCING, OR RAILINGS.

NOTES:

- (A) DO NOT SCORE OR MAKE GROOVES IN SLOPED SURFACE. LINES SHOWN ON STANDARD DETAILS ARE FOR ILLUSTRATION ONLY.
- (B) DETAILS OF THE DETECTABLE WARNING SURFACE ARE SHOWN IN THE CONSTRUCTION PLANS AND SHEET 608-001-8/12 OF THE STANDARD DRAWINGS.
- (C) IN ALTERATIONS WHERE EXISTING PHYSICAL CONSTRAINTS PREVENT COMPLIANCE TO PROVIDE A CURB RAMP FOR EACH PEDESTRIAN CROSSING A SINGLE DIAGONAL CURB RAMP SHALL BE PERMITTED TO SERVE BOTH PEDESTRIAN STREET CROSSINGS.
- (D) CONCRETE HEADER CURBS CONSTRUCTED AS PART OF THE CURB RAMP WILL BE CONSIDERED INCIDENTAL TO ITEM NUMBER 608004 AND NO SEPARATE PAYMENT WILL BE MADE.

MICHAEL J. SMELKER
NEW MEXICO
15350
LICENSED PROFESSIONAL ENGINEER
1-18-15

NO.	DATE	REV. BY	DESCRIPTION
REVISIONS / CHANGE NOTICES			

NEW MEXICO
DEPARTMENT OF TRANSPORTATION
STANDARD DRAWING

DRIVEWAY APRONS

APPROVED: [signature] CHIEF ENGINEER DATE: 1-15

608-001-9

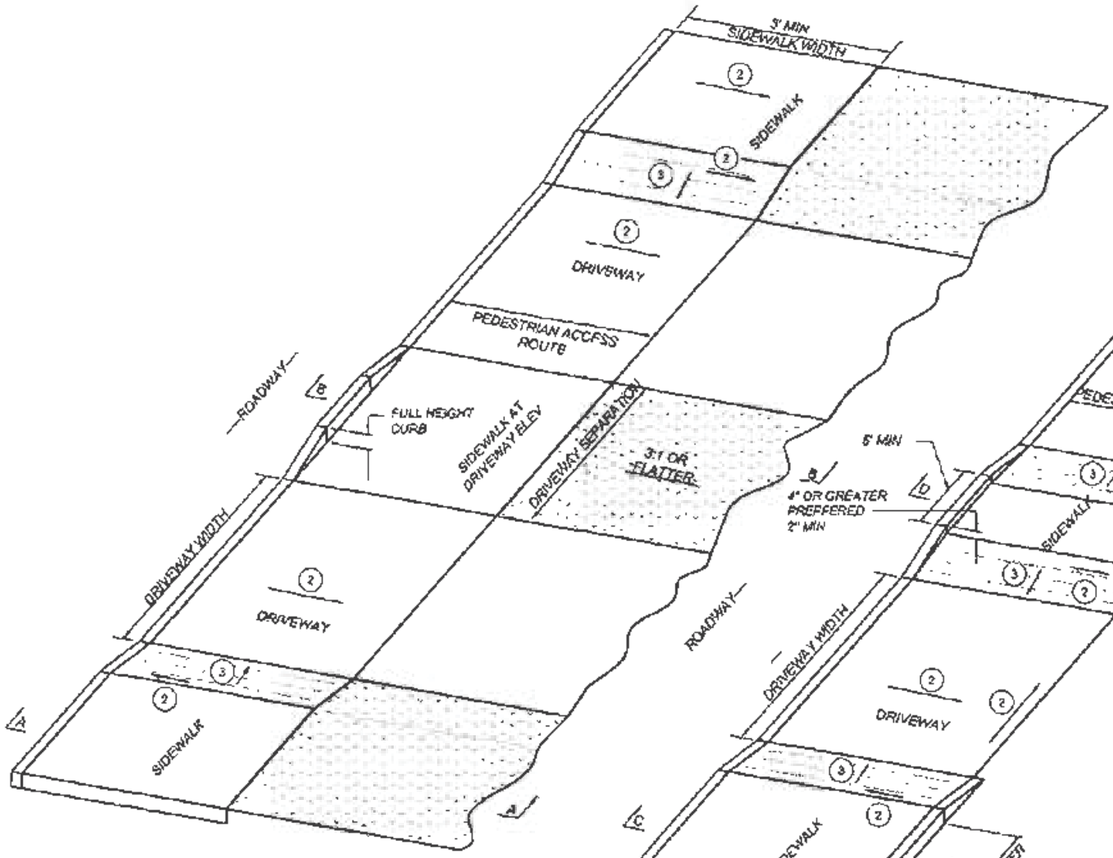

TYPE 5
MULTIPLE DRIVEWAYS
SCALE: NONE

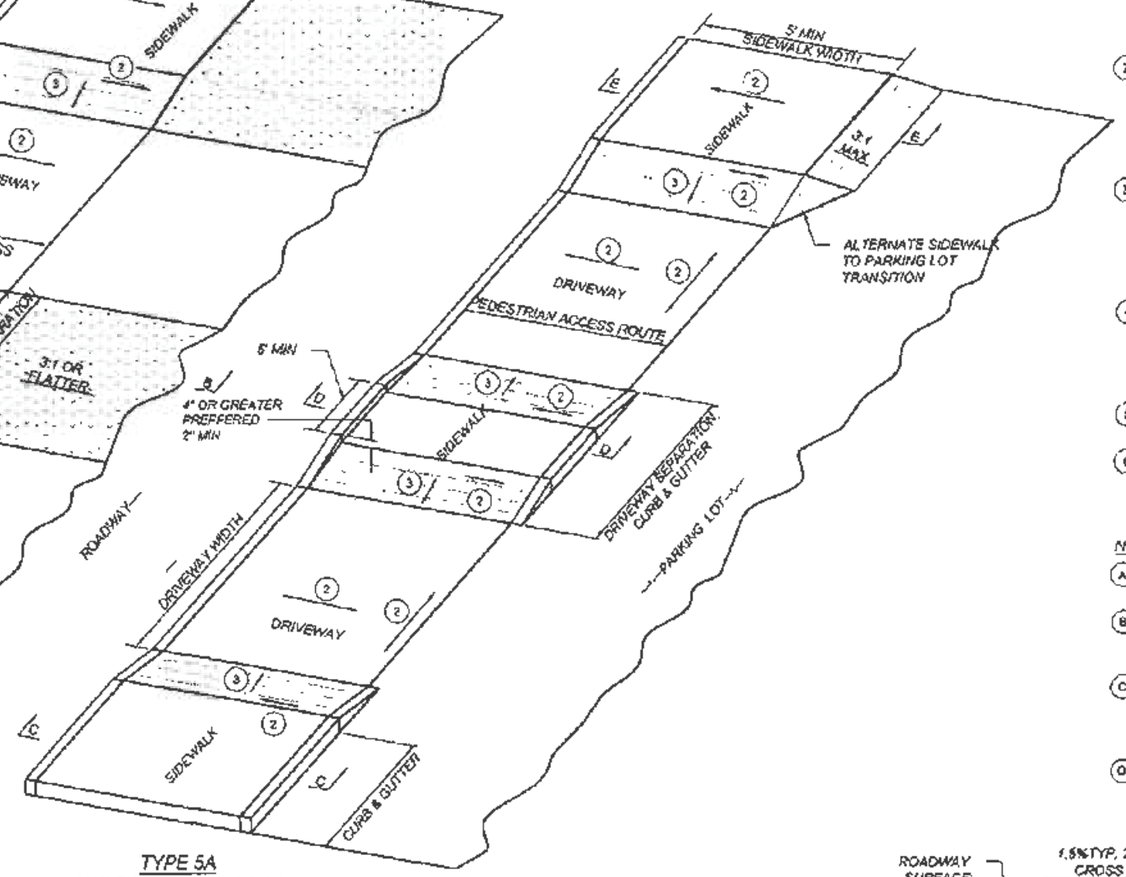

TYPE 5A
MULTIPLE DRIVEWAYS
SCALE: NONE

KEYED NOTES

1. TURNING SPACE SHALL HAVE MAXIMUM CROSS SLOPE AND LONGITUDINAL SLOPE OF 2.0% (RECOMMEND 1.5%). TURNING SPACE SHALL BE 4.0 FT BY 4.0 FT MIN (RECOMMEND 5.0 FT BY 5.0 FT) AT THE TOP OF THE CURB RAMP AND SHALL BE PERMITTED TO OVERLAP OTHER TURNING SPACES AND CLEAR SPACES. WHERE THE TURNING SPACE IS CONSTRAINED AT THE BACK OF SIDEWALK, THE TURNING SPACE SHALL BE 4.0 FT MIN BY 6.0 FT MIN. THE 6.0 FT SHALL BE PROVIDED IN THE DIRECTION OF THE RAMP RUN.
2. CROSS SLOPE SHALL BE 2.0% MAX (RECOMMENDED 1.5%). EXCEPTION: THE CROSS SLOPE OF CURB RAMPS AT PEDESTRIAN STREET CROSSING WITHOUT YIELD OR STOP CONTROL, TRAFFIC SIGNALS DESIGNED FOR THE GREEN PHASE, AND AT MIDBLOCK PEDESTRIAN STREET CROSSING, THE CROSS SLOPE IS PERMITTED TO MATCH STREET OR HIGHWAY GRADE.
3. RUNNING SLOPE OF THE CURB RAMP SHALL BE 8.3 % MAX (RECOMMENDED 7.0%) BUT SHALL NOT REQUIRE THE RAMP LENGTH TO EXCEED 15.0 FT TO AVOID CHASING THE SLOPE INDEFINITELY WHEN CONNECTING TO STEEP GRADES. WHEN APPLYING THE 15 FOOT MAX LENGTH, THE RUNNING SLOPE OF THE CURB RAMP SHALL BE EXTENDED AS FLAT AS MAXIMUM EXTENT PRACTICABLE.
4. GRADE BREAKS AT THE TOP AND BOTTOM OF CURB RAMPS RUNS SHALL BE PERPENDICULAR TO THE DIRECTION OF THE RAMP RUN. GRADE BREAKS SHALL NOT BE PERMITTED ON THE SURFACE OF RAMP RUNS AND TURNING SPACE. SURFACE SLOPES THAT MEET AT GRADE BREAKS SHALL BE FLUSH.
5. COUNTER SLOPE OF THE GUTTER OR STREET AT THE FOOT OF A CURB RAMP, RUN OR TURNING SPACE SHALL BE 5% MAX.
6. FLARED SIDES ARE TO HAVE A SLOPE OF 10% MAX (RECOMMEND 9%), MEASURED PARALLEL TO THE BACK OF THE CURB, UNLESS THE FLARED SIDES ARE PROTECTED FROM CROSS TRAVEL BY LANDSCAPING, STREET FURNITURE, CHAINS, FENCING, OR RAILINGS.

NOTES:

- (A) DO NOT SCORE OR MAKE GROOVES IN SLOPED SURFACE. LINES SHOWN ON STANDARD DETAILS ARE FOR ILLUSTRATION ONLY.
- (B) DETAILS OF THE DETECTABLE WARNING SURFACE ARE SHOWN IN THE CONSTRUCTION PLANS AND SHEET 608-001-8/12 OF THE STANDARD DRAWINGS.
- (C) IN ALTERATIONS WHERE EXISTING PHYSICAL CONSTRAINTS PREVENT COMPLIANCE TO PROVIDE A CURB RAMP FOR EACH PEDESTRIAN CROSSING A SINGLE DIAGONAL CURB RAMP SHALL BE PERMITTED TO SERVE BOTH PEDESTRIAN STREET CROSSINGS.
- (D) CONCRETE HEADER CURBS CONSTRUCTED AS PART OF THE CURB RAMP WILL BE CONSIDERED INCIDENTAL TO ITEM NUMBER 608004 AND NO SEPARATE PAYMENT WILL BE MADE.

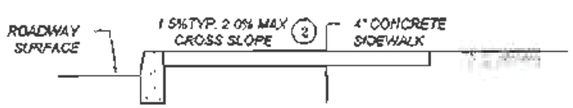

SECTION A-A
SCALE: NONE

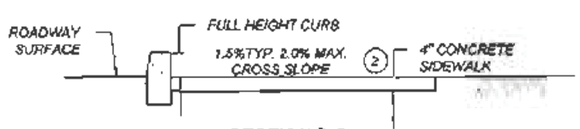

SECTION B-B
SCALE: NONE

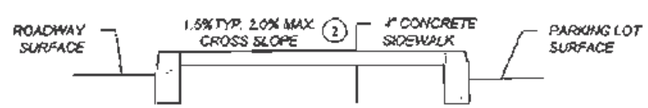

SECTION C-C
SCALE: NONE

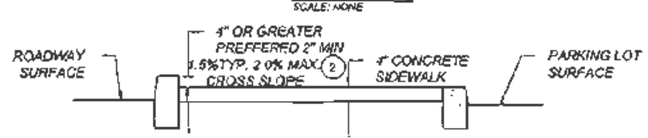

SECTION D-D
SCALE: NONE

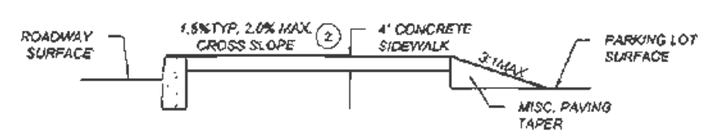

SECTION E-E
SCALE: NONE

NO.	DATE	REV. BY	DESCRIPTION
REVISIONS (OR CHANGE NOTICES)			

NEW MEXICO
DEPARTMENT OF TRANSPORTATION
STANDARD DRAWING

DRIVEWAY APRONS

APPROVED: CHIEF ENGINEER — DATE

608-001-10

DRAWING SCALE = NOT TO SCALE

SUMMARY
FILENAME

STAIRWAY REQUIREMENTS

1. STAIRWAYS SHALL BE 4 FT WIDE MINIMUM BETWEEN HANDRAILS.
2. ALL STEPS ON A FLIGHT OF STAIRS SHALL HAVE UNIFORM RISER HEIGHTS AND UNIFORM TREAD DEPTH. RISERS SHALL BE 4 INCHES (100mm) HIGH MINIMUM AND 7 INCHES (180mm) MAXIMUM. TREADS SHALL BE 11 INCHES (280mm) DEEP MINIMUM MEASURED FROM RISER TO RISER.
3. OPEN RISERS SHALL NOT BE PERMITTED.
4. STAIR TREADS SHALL BE STABLE, FIRM, AND SLIP RESISTANT.
5. THE RADIUS OF CURVATURE AT THE LENDING EDGE OF THE TREAD SHALL BE ½ INCH (13mm) MAXIMUM. NOSINGS THAT PROJECT BEYOND RISERS SHALL HAVE THE UNDERSIDE OF THE LANDING EDGE CURVED OR BEVELED. RISERS SHALL BE PERMITTED TO SLOPE UNDER THE TREAD AT AN ANGLE OF 30 DEGREES MAXIMUM FROM THE VERTICAL THE PERMITTED PROJECTION OF THE NOSING SHALL BE 1 INCHES (38mm) MAXIMUM BEYOND THE TREAD BELOW.
6. HANDRAILS SHALL BE PROVIDED ON BOTH SIDES OF STAIRS.
7. OUTDOOR STAIRS AND OUTDOOR APPROACHES TO STAIRS SHALL BE DESIGNED SO THAT WATER WILL NOT ACCUMULATE ON WALKING SURFACES.

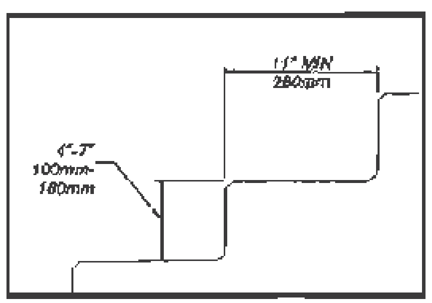

VERTICAL RISER

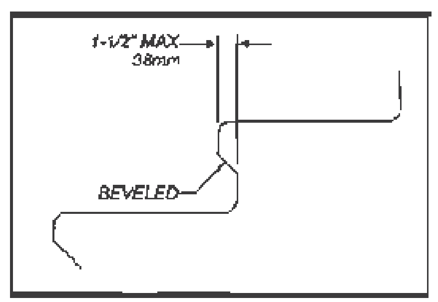

BEVELED RISER

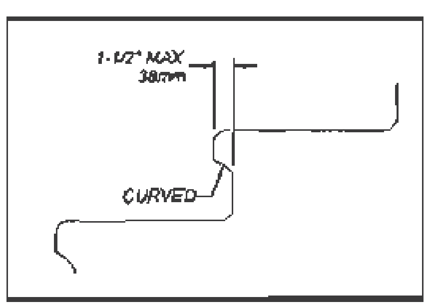

CURVED RISER

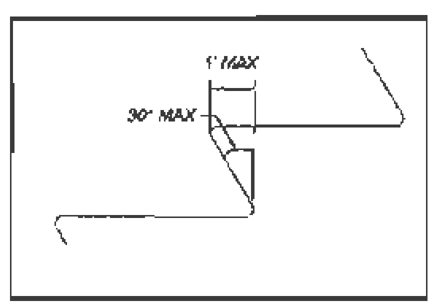

ANGLED RISER

HANDRAIL REQUIREMENTS

1. HANDRAILS SHALL BE PROVIDED ON BOTH SIDES OF STAIRS AND RAMPS.
2. HANDRAILS SHALL BE CONTINUOUS WITHIN THE FULL LENGTH OF EACH STAIR FLIGHT OR RAMP RUN. INSIDE HANDRAILS ON SWITCH BACK OR DOGLEG STAIRS OR RAMPS SHALL BE CONTINUOUS BETWEEN FLIGHTS OR RUNS.
3. TOP GRIPPING SURFACES OF HANDRAILS SHALL BE 34 INCHES (865mm) MINIMUM AND 38 INCHES (965mm) MAXIMUM VERTICALLY ABOVE STAIR NOSINGS AND RAMP SURFACES. HANDRAILS SHALL BE AT A CONSISTENT HEIGHT ABOVE STAIR NOSINGS AND RAMP SURFACES.
4. CLEAR SPACE BETWEEN HANDRAIL AND WALL SHALL BE 1 INCH (38mm) MINIMUM
5. GRIPPING SURFACES SHALL BE CONTINUOUS WITHOUT INTERRUPTION BY NEW POSTS OTHER CONSTRUCTION ELEMENTS, OR OBSTRUCTIONS.
   EXCEPTION:
   HANDRAIL BRACKETS OR BALUSTERS ATTACHED TO THE BOTTOM SURFACE OF THE HANDRAIL SHALL NOT BE CONSIDERED OBSTRUCTIONS PROVIDED THEY COMPLY WITH THE FOLLOWING CRITERIA

A. NOT MORE THAN 20 PERCENT OF THE HANDRAIL LENGTH IS OBSTRUCTED.
B. HORIZONTAL PROJECTIONS BEYOND THE SIDES OF THE HANDRAIL OCCUR 2 INCHES (64mm) MINIMUM BELOW THE BOTTOM OF THE HANDRAIL AND
C. EDGES HAVE 11 INCH (32MM) MINIMUM RADIUS

6. HANDRAILS SHALL HAVE A CIRCULAR CROSS SECTION WITH AN OUTSIDE DIAMETER OD 1-1/4" or 1.25" INCH (32mm) MINIMUM AND 2 INCH (51mm) MAXIMUM OR SHALL PROVIDE EQUIVALENT GRASPABILITY
   EXCEPTION: HANDRAILS WITH OTHER SHAPES SHALL BE PERMITTED PROVIDED THEY HAVE A PERIMETER DIMENSION OF 4 INCH (100mm) MINIMUM AND A 6.25 INCH(160mm) MAXIMUM AND PROVIDED THEIR LARGEST CROSS SECTION DIMENSION IS 2.25 INCH (57mm) MAXIMUM
7. HANDRAILS AND ANY WALL OR OTHER SURFACES ADJACENT TO THEM, SHALL BE FREE OF ANY SHARP OR ABRASIVE ELEMENTS. EDGES SHALL HAVE 1 INCH (32mm) MINIMUM RADIUS.
8. HANDRAILS SHALL NOT ROTATE WITHIN THEIR FITTINGS.
9. HANDRAILS FOR STAIRS AND RAMPS SHALL HAVE EXTENSIONS.
   EXCEPTIONS:
   A. EXTENSIONS ARE NOT REQUIRED FOR CONTINUOUS HANDRAILS AT THE INSIDE TURN OF STAIRS AND RAMPS
   B. IN ALTERATIONS FULL EXTENSIONS OF HANDRAILS SHALL NOT BE REQUIRED WHERE SUCH EXTENSIONS WOULD BE HAZARDOUS OR IMPOSSIBLE DUE TO PLAN CONFIGURATION.
10. RAMP HANDRAILS SHALL EXTEND HORIZONTALLY 12 INCHES (305mm) MINIMUM BEYOND OF RAMP RUNS SUCH EXTENSION SHALL RETURN TO WALL GUARD OR THE WALKING SURFACE OR SHALL BE CONTINUOUS TO THE HANDRAIL OF AN ADJACENT RAMP RUN.
11. AT THE TOP OF A STAIR FLIGHT HANDRAILS SHALL EXTEND HORIZONTALLY ABOVE THE LANDING FOR 12 INCHES (305mm) MINIMUM BEGINNING DIRECTLY ABOVE THE FIRST RISER NOSING. SUCH EXTENSIONS SHALL RETURN TO A WALL, OR THE WALKING SURFACE, OR SHALL BE CONTINUOUS TO THE HANDRAIL OF AN ADJACENT STAIR FLIGHT.
12. AT THE BOTTOM OF THE STAIR FLIGHT HANDRAILS SHALL EXTEND AT THE SLOPE OF THE STAIR FLIGHT FOR A HORIZONTAL DISTANCE AT LEAST EQUAL TO ON TREAD DEPTH BEYOND THE LAST RISER NOSING. EXTENSIONS SHALL RETURN TO A WELL, GUARD, OR THE LANDING SURFACE, OR SHALL BE CONTINUOUS TO THE HANDRAIL OF AN ADJACENT STAIR FLIGHT.

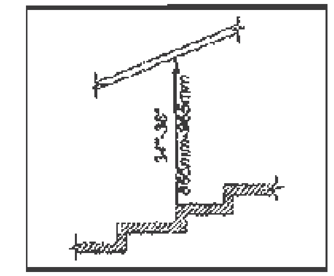

STAIR HANDRAIL HEIGHT

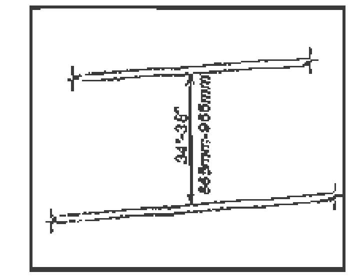

RAMP HANDRAIL HEIGHT

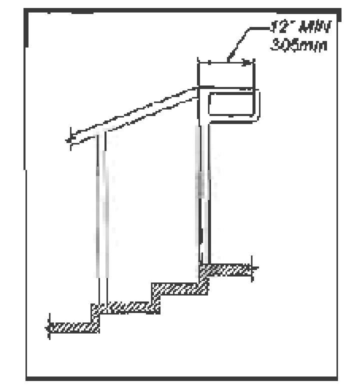

TOP HANDRAIL EXTENSION AT STAIRS

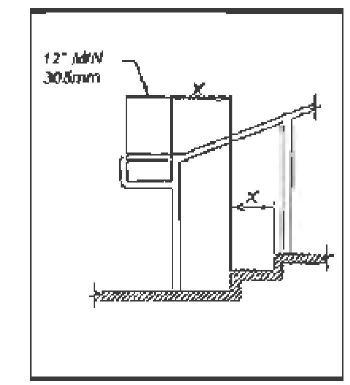

BOTTOM HANDRAIL EXTENSION AT STAIRS

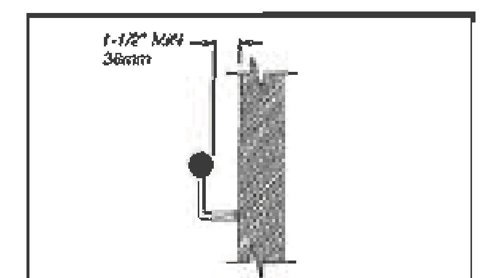

HANDRAIL CLEARANCE

NO.	DATE	REV. BY	DESCRIPTION

REVISIONS (OR CHANGE NOTICES)

NEW MEXICO
DEPARTMENT OF TRANSPORTATION
STANDARD DRAWING

PEDESTRIAN ACCESS DETAILS
STAIRWAY AND HANDRAILS

APPROVED ________ DESIGN ENGINEER ________ DATE

608-001-11 608 11 of 12

file path

DRAWING SCALE = NOT TO SCALE

SUMMARY
FILENAME

ACCESSIBLE ROUTES:

ACCESSIBLE EXTERIOR ROUTES SHALL BE PROVIDED FROM TRANSPORTATION STOPS, ACCESSIBLE PARKING AND ACCESSIBLE PASSENGER LOADING ZONES AND PUBLIC SIDEWALKS TO THE ACCESSIBLE BUILDING ENTRANCE THEY SERVE. ACCESSIBLE PARKING SPACES SHALL BE LOCATED ON THE SHORTEST ACCESSIBLE ROUTE OF TRAVEL FROM ADJACENT PARKING TO AN ACCESSIBLE BUILDING ENTRANCE OR FACILITY.

ACCESSIBLE PARKING REQUIREMENTS:

1. EACH FACILITY SHALL PROVIDE ACCESSIBLE PARKING SPACES IN COMPLIANCE WITH THE FOLLOWING TABLE:

NUMBER OF ACCESSIBLE PARKING SPACES

TOTAL PARKING SPACES	TOTAL REQUIRED ACCESSIBLE PARKING SPACES	NUMBER REQUIRED TO BE VAN ACCESSIBLE
1-25	1	1
26-35	2	1
36-50	3	1
51-100	4	1
101-300	8	2
301-500	12	2
501-800	16	3
801-1000	20	4
OVER 1,000	20 SPACES PLUS 1 SPACE FOR EVERY 100 SPACES, OR FRACTION THEREOF, OVER 1,000	1 OF EVERY 8 ACCESSIBLE PARKING SPACES, OR FRACTION THEREOF

2. CAR SPACES SHALL BE 96 INCHES (2440 mm) WIDE MINIMUM AND VAN PARKING SPACES SHALL BE 132 INCHES AND SHALL HAVE AN ADJACENT ACCESS AISLE.

3. ACCESS AISLES SERVING PARKING SPACES SHALL CONNECT TO THE BUILDING OR FACILITY ENTRANCE BY AN ACCESSIBLE SIDEWALK. TWO PARKING SPACES SHALL BE PERMITTED TO SHARE A COMMON ACCESS AISLE. THE VAN ACCESS AISLE IS PREFERRED TO BE AT THE RIGHT SIDE (PASSENGER SIDE) OF THE PARKING SPACE. (AN ACCESSIBLE SIDEWALK IS 60 INCHES (1525mm) MINIMUM CLEAR WIDTH, 50:1 MAXIMUM CROSS SLOPE WITH A RUNNING SLOPE OF 20:1 MAXIMUM OR THE RUNNING SLOPE MAY FOLLOW THE ADJACENT ROAD PROFILE GRADE.) PARKED VEHICLE OVERHANGS SHALL NOT REDUCE THE MINIMUM 48 INCH CLEAR WIDTH OF AN ACCESSIBLE ROUTE.

4. ACCESS AISLES SERVING CAR PARKING SPACES SHALL BE 60 INCHES (1525mm) WIDE MINIMUM. ACCESS AISLES SERVING VAN PARKING SPACES SHALL BE 96 INCHES (2440mm) WIDE MINIMUM.

5. ACCESS AISLES SHALL EXTEND THE FULL LENGTH OF THE PARKING SPACES THEY SERVE.

6. PARKING SPACES AND ACCESS AISLES SHALL HAVE SURFACE SLOPES NOT STEEPER THAN 50:1. ACCESS AISLES SHALL BE AT THE SAME LEVEL AS THE PARKING SPACES THEY SERVE.

7. PARKING SPACES FOR VANS SHALL HAVE A VERTICAL CLEARANCE OF 98 INCHES (2490mm) MINIMUM AT THE SPACE AND ALONG THE VEHICULAR ROUTE THERETO.

8. EACH ACCESSIBLE PARKING SPACE SHALL BE IDENTIFIED BY A SIGN ON A POST. SIGNS SHALL INCLUDE THE INTERNATIONAL SYMBOL OF ACCESSIBILITY. THE CLEARANCE TO THE BOTTOM OF THE SIGN (R7-8) SHALL BE AT LEAST 7 FEET (2100mm), LOCATED AT THE HEAD OF THE PARKING SPACE. VAN ACCESSIBLE PARKING SPACES SHALL HAVE AN ADDITIONAL SIGN (R7-8A) MOUNTED BELOW THE INTERNATIONAL SYMBOL OF ACCESS IDENTIFYING THE SPACE AS "VAN ACCESSIBLE." SIGNS MUST INCLUDE THE LANGUAGE "VIOLATORS ARE SUBJECT TO A FINE AND/OR TOWING".

9. PARKING SPACE AND ACCESS AISLES SHALL HAVE OSHA SAFETY BLUE STRIPING. STRIPING SHALL BE 4 INCHES (100mm) WIDE. ACCESS AISLES STRIPING SHALL BE 30 INCHES (760mm) ON CENTER. ACCESS AISLE SHALL HAVE THE WORDS "NO PARKING" IN CAPITAL LETTER OF WHICH SHALL BE AT LEAST ONE FOOT HIGH AND AT LEAST TWO INCHES WIDE PLACED AT THE REAR OF THE PARKING SPACE SO AS TO BE CLOSE TO WHERE AN ADJACENT VEHICLES REAR TIRES WOULD BE PLACED.

10. EACH ACCESSIBLE PARKING SPACE SHALL INCLUDE, CENTERED AT THE FOOT, A PAVEMENT MARKING OF THE INTERNATIONAL SYMBOL OF ACCESSIBILITY TO BE CLEARLY VISIBLE WHEN THE SPACE IS OCCUPIED.

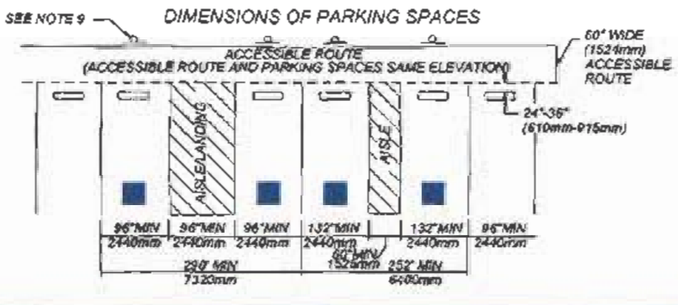

ACCESSIBLE PASSENGER LOADING ZONE REQUIREMENTS.

1. PASSENGER LOADING ZONES SHALL PROVIDE A 60 INCH (1525mm) WIDE ACCESS AISLE ADJACENT AND PARALLEL TO A VEHICLE PULL-UP SPACE. ACCESS AISLES SHALL BE 20 FEET (6100mm) LONG MINIMUM.

2. ACCESS AISLES SHALL BE PART OF THE ACCESSIBLE ROUTE TO THE BUILDING OR FACILITY ENTRANCE, AND MARKED TO DISCOURAGE PARKING.

3. VEHICLE PULL-UP SPACES IN PASSENGER LOADING ZONES AND ACCESS AISLES SHALL HAVE SURFACE SLOPES NOT STEEPER THAN 50:1. ACCESS AISLES SHALL BE AT THE SAME LEVEL AS THE VEHICLE PULL-UP SPACE THEY SERVE.

4. VERTICAL CLEARANCE OF 114 INCHES (2895mm) MINIMUM SHALL BE PROVIDED AT PASSENGER LOADING ZONES AND ALONG VEHICLE ACCESS ROUTES TO SUCH AREAS FROM SITE ENTRANCES.

5. EACH ACCESSIBLE PASSENGER LOADING ZONE SHALL BE IDENTIFIED BY A SIGN ON A POST. SIGNS SHALL INCLUDE THE INTERNATIONAL SYMBOL OF ACCESSIBILITY.

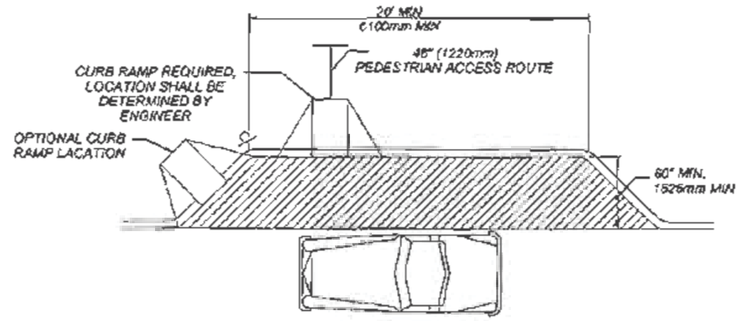

ACCESSIBLE PASSENGER LOADING ZONE
PLAN VIEW

TRANSIT STOP REQUIREMENTS

1. TRANSIT STOPS SHOULD BE LOCATED SO THAT THERE IS A LEVEL AND STABLE SURFACE FOR BOARDING VEHICLES.

2. LOCATING TRANSIT STOPS AT SIGNALIZED INTERSECTIONS INCREASE THE USABILITY FOR PEDESTRIANS WITH DISABILITIES.

3. WHERE SECURITY BOLLARDS ARE INSTALLED AT TRANSIT STOPS, THEY MUST NOT OBSTRUCT THE CLEAR SPACE AT BOARDING AND ALIGHTING AREAS OR REDUCE THE REQUIRED CLEAR WIDTH OF PEDESTRIAN ACCESS ROUTES.

4. TRANSIT STOPS SHALL COMPLY WITH PROWAG SECTION R 308 TRANSIT STOPS AND TRANSIT SHELTERS.

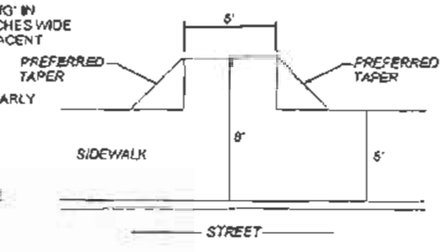

TRANSIT STOP
PLAN VIEW

RAMP REQUIREMENTS:

1. RAMP RUNS SHALL HAVE A RUNNING SLOPE GREATER THAN 1:20 AND NOT STEEPER THAN 1:12. THE EXCEPTION SHALL REMAIN AS SHOWN, INCLUDING THE TABLE FOR EXISTING BUILDINGS AND FACILITIES.

2. RAMP RUNS SHALL HAVE A RUNNING SLOPE NOT STEEPER THAN 12:1 EXCEPTION: RAMPS IN OR ON EXISTING BUILDINGS OR FACILITIES SHALL BE PERMITTED TO HAVE SLOPES STEEPER THAN 12:1 AND SHALL COMPLY WITH THE FOLLOWING TABLE WHERE SUCH SLOPES STEEPER THAN 8:1 SHALL NOT BE PERMITTED.

TABLE FOR EXISTING SITES, BUILDINGS AND FACILITIES

SLOPE	MAXIMUM RISE
STEEPER THAN 10:1 BUT NOT STEEPER THAN 8:1	3 INCHES (75mm)
STEEPER THAN 12:1 BUT NOT STEEPER THAN 10:1	6 INCHES (150mm)

3. CROSS SLOPE OF RAMP RUNS SHALL NOT BE STEEPER THAN 50:1.

4. FLOOR OR GROUND SURFACES OF RAMP RUN SHALL BE STABLE, FIRM, AND SLIP RESISTANT.

5. THE CLEAR WIDTH OF A RAMP RUN SHALL BE 48 INCHES (915mm) MINIMUM MEASURED BETWEEN HANDRAILS.

6. THE RISE FOR ANY RAMP RUN SHALL BE 30 INCHES (760mm) MAXIMUM.

7. RAMPS SHALL HAVE LANDINGS AT THE BOTTOM AND TOP OF EACH RUN. LANDINGS SHALL COMPLY WITH THE FOLLOWING:
   A. LANDINGS SHALL HAVE A SOPE NOT STEEPER THAN 50:1.
   B. CLEAR WIDTH OF LANDINGS SHALL BE AT LEAST AS WIDE AS THE WIDEST RAMP RUN LEADING TO THE LANDING.
   C. LANDING LENGTH SHALL BE 60 INCHES (1525mm) MINIMUM CLEAR.
   D. RAMPS THAT CHANGE DIRECTION AT LANDINGS SHALL HAVE A 60 INCH BY 60 INCH (1525mm) MINIMUM LANDING.
   E. WHERE DOORWAYS ARE ADJACENT TO A RAMP LANDING, MANEUVERING CLEARANCES SHALL COMPLY WITH 2010 AMERICANS WITH DISABILITIES ACT STANDARDS FOR ACCESSIBLE DESIGN (2010 ADA) SECTION 404.

8. RAMPS WITH A RISE GREATER THAN 6 INCHES (150mm) SHALL HAVE HANDRAILS. HANDRAILS SHALL NOT REDUCE THE REQUIRED CLEARANCES OF A RAMP RUN OR LANDINGS.

9. EDGE PROTECTION SHALL BE PROVIDED ON EACH SIDE OF RAMP RUNS AND AT EACH SIDE OF RAMP LANDINGS.

   EXCEPTIONS:
   A. RAMPS NOT REQUIRED TO HAVE HANDRAILS WHERE SIDE FLARES ARE PROVIDED.
   B. SIDES OF RAMP LANDINGS SERVING AN ADJOINING RAMP RUN OR STAIRWAY.
   C. SIDES OF RAMP TURN SPACE HAVING A VERTICAL DROP-OFF OF 1/2 INCH (13mm) MAXIMUM WITHIN 10 INCHES (255mm) HORIZONTALLY OF THE MINIMUM LANDING AREA.

10. EDGE PROTECTION MAY BE PROVIDED BY EXTENDING A FLOOR OR GROUND SURFACE, OF THE RAMP RUN OR LANDING 12 INCHES (305mm) MINIMUM BEYOND THE INSIDE FACE OF A HANDRAIL OR AN EDGE PROTECTION CURB OR BARRIER SHALL BE PROVIDED THAT PREVENTS THE PASSAGE OF A 4-INCH (100mm) DIAMETER SPHERE BELOW A HEIGHT OF 4 INCHES (100mm).

11. OUTDOOR RAMPS AND APPROACHES TO RAMPS SHALL BE DESIGNED SO THAT WATER WILL NOT ACCUMULATE ON WALKING SURFACES.

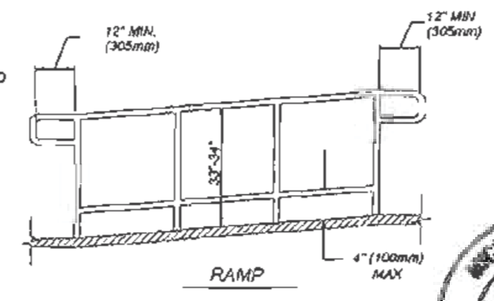

RAMP

MICHAEL J. SMELKER
NEW MEXICO
15350
LICENSED PROFESSIONAL ENGINEER
1-13-15

NO.	DATE	REV. BY	DESCRIPTION

REVISIONS (OR CHANGE NOTICES)

NEW MEXICO
DEPARTMENT OF TRANSPORTATION
STANDARD DRAWING

PEDESTRIAN ACCESS DETAILS PARKING AND PASSENGER LOADING ZONES

APPROVED DESIGN ENGINEER — DATE 1-13-15

608-001-12

DRAWING SCALE = NOT TO SCALE

file path

LIGHTING NOTES

1. LOCATIONS OF CONDUIT, FOUNDATIONS, PULL BOXES AND CONTROL CABINETS SHOWN ON THE PLANS ARE SCHEMATIC AND SHALL BE ADJUSTED IN THE FIELD TO AVOID UTILITIES AND TO MAXIMIZE CLEAR SPACE AVAILABLE FOR PEDESTRIANS AND WHEELCHAIRS TO COMPLY WITH THE AMERICANS WITH DISABILITIES AT. THE CONTRACTOR SHALL MEET WITH THE PROJECT MANAGER IN THE FIELD AT ALL LOCATIONS TO SPOT EQUIPMENT BEFORE BEGINNING THE WORK. ALL SUCH EQUIPMENT SHALL BE INSTALLED WITHIN THE RIGHT-OF-WAY. LIGHT STANDARDS HAVE BREAKAWAY SYSTEMS. BREAKAWAY SYSTEMS WILL BE CONSIDERED INCIDENTAL TO THE STANDARD.
2. ALL ROADWAY LIGHTING CIRCUITS ON THIS PROJECT SHALL BE 240 VOLTS. FOR LIGHTING TO THE SOUTH THE LOAD SHALL BE DISTRIBUTED EQUALLY FOR EACH CIRCUIT, EVEN NUMBERED POLES ON ONE CIRCUIT AND ODD NUMBERED POLES ON ANOTHER CIRCUIT.
3. CONTRACTOR SHALL REMOVE EXISTING CONDUITS AND PULL BOXES THROUGHOUT THE PROJECT AS DIRECTED BY PROJECT MANAGER.
4. EACH CIRCUIT FOR ROADWAY LIGHTING SHALL BE INSTALLED IN SEPARATE CONDUITS UNLESS APPROVED OTHERWISE.
5. EACH TIME A ROADWAY LUMINAIRE IS TURNED ON OR OFF THE CONTRACTOR SHALL COORDINATE WITH THE FOLLOWING REPRESENTATIVES:
   - XCEL ENERGY
6. POWER SHALL NEITHER BE TURNED ON OR OFF UNTIL RESPONSIBLE PARTIES FOR EACH LIGHTING SYSTEM HAVE BEEN NOTIFIED.
7. THE CONTRACTOR SHALL PAY FOR COSTS FOR XCEL ENERGY TO PROVIDE POWER SERVICE.
8. ALL LIGHTING CONTROL CABINETS SHALL INCLUDE PHOTO ELECTRIC CELLS.
9. THE CONTRACTOR SHALL FURNISH AND INSTALL TYPE III, 400 WATT, HIGH PRESSURE SODIUM, FULL CUTOFF FLAT GLASS LUMINAIRES WITHOUT INDIVIDUAL PHOTO CELLS TO CONFORM WITH THE NEW MEXICO NIGHT SKY PROTECTION ACT.
10. LIGHTING CONTROL CABINET SHALL BE OF THE FOLLOWING TYPE:
    - 4 CIRCUIT (AS SHOWN ON PLANS) METERED
11. LIGHTING IS TO BE SERVED FROM A NEW METER PEDESTAL SHOWN ON THE PLANS AND COORDINATED WITH XCEL ENERGY AND PAID FOR BY THE CONTRACTOR AS A PART OF THIS PROJECT.
12. LIGHTING STANDARDS SHALL BE LOCATED AS FOLLOWS:
    - ON SECTIONS WITH CURB, GUTTER AND SIDEWALK, PLACE FOUNDATION DIRECTLY BEHIND SIDEWALK
    - ON SECTIONS WITH CURB, GUTTER AND WITHOUT SIDEWALK, PLACE FOUNDATION 10' BACK FROM CURB AND GUTTER
    - ON SECTIONS WITHOUT CURB AND GUTTER, PLACE FOUNDATION 12' BACK FROM EDGE OF DRIVING LANE
13. LIGHTS NEAR EXISTING OVERHEAD TRANSMISSION LINES MUST MAINTAIN VERTICAL CLEARANCE AND HORIZONTAL CLEARANCE FROM THE CLOSEST PHASE CONDUCTOR. XCEL ENERGY WILL ASSIST IN MEASUREMENT AND DETERMINATION OF CLEARANCE.
14. ALL CONDUIT INSTALLED IN A TRENCH SHALL BE A MINIMUM OF 30" DEEP AND FLAGGED WITH CAUTION TAPE ONE FOOT ABOVE THE CIRCUIT. USE RIGID NONMETALLIC CONDUIT SIZE AS INDICATED ON PLANS.
15. INSTALL PULL BOXES AS SHOWN AND/OR AS NEEDED FOR PULLING LENGTH AND PER CODE REQUIREMENTS.
16. XCEL ENERGY WILL PROVIDE AND INSTALL ALL LIGHT POLES AND LUMINARIES. CONTRACTOR SHALL INSTALL CONDUIT, CONDUCTORS, FOUNDATIONS, BREAKAWAYS, AND SHROUDS. CONTRACTOR COORDINATION WITH XCEL SHALL BE CONSIDERED INCIDENTAL TO COMPLETION OF PROJECT.

LIGHTING INCIDENTAL ITEMS

1. GROUND RODS FOR FOUNDATIONS.
2. BREAKAWAYS AND SHROUDS.
3. REWIRING OF ANY EXISTING LUMINAIRES TO REMAIN OR TO BE RESET.
4. COORDINATION WITH OTHER ENTITIES.
5. REMOVAL OF EXISTING LIGHTS AND SALVAGE.

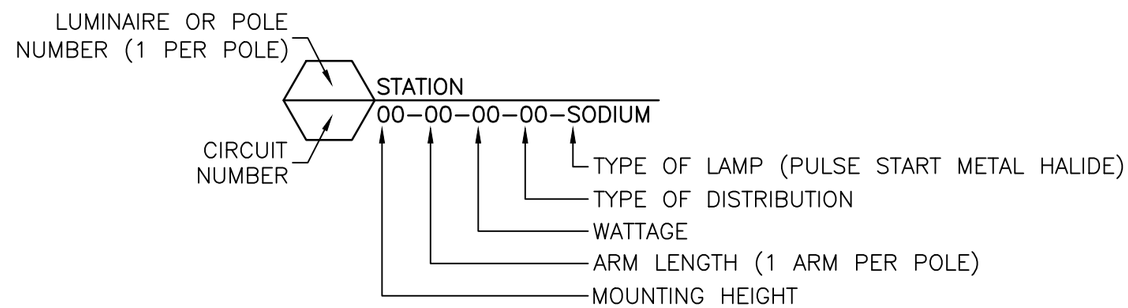

MOLZENCORBIN
1155 Commerce Dr., Suite F
Las Cruces, New Mexico 88011
575 522 0049 office
575 522 7884 fax
MolzenCorbin.com

WYATT D. KARTCHNER
NEW MEXICO
20843
2/23/16
REGISTERED PROFESSIONAL ENGINEER

REV NO	REV DATE	DESCRIPTION
1	2/23/16	ROAD AND DRAIN REVISIONS

PROJECT NUMBER: CRS133-12
DESIGNED BY: WDK
DRAWN BY: EG
CHECKED BY: JTM
PROJ ENGINEER: WDK
PROJECT DATE: OCTOBER 2015

CALLAWAY DRIVE
LIGHTING PLAN NOTES

CALLAWAY DRIVE
CITY OF CARLSBAD
CARLSBAD, NEW MEXICO

E-101
SHEET

© COPYRIGHT

I:\CARLSBAD\CRS133-12-Callaway Design\DWG\ECA133-101.dwg

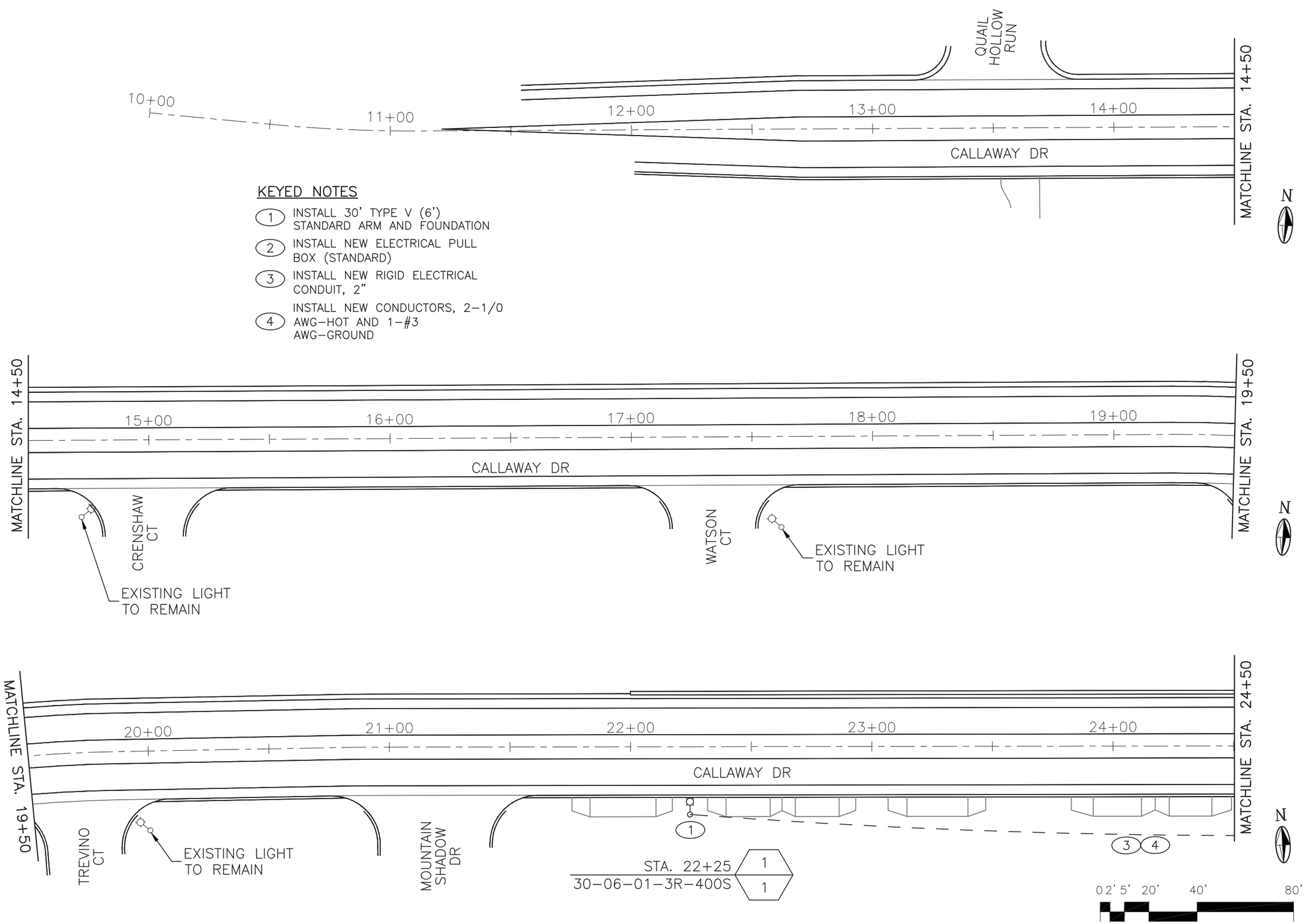

MOLZENCORBIN
1155 Commerce Dr., Suite F
Las Cruces, New Mexico 88011
575 522 0049 office
575 522 7884 fax
MolzenCorbin.com

WYATT D. KARTCHNER
NEW MEXICO
20843
REGISTERED PROFESSIONAL ENGINEER
2/23/16

REV NO	REV DATE	DESCRIPTION
1	2/23/16	ROAD AND DRAIN REVISIONS

PROJECT NUMBER: CRS133-12
DESIGNED BY: WDK
DRAWN BY: EG
CHECKED BY: JTM
PROJ ENGINEER: WDK
PROJECT DATE: OCTOBER 2015

CALLAWAY DRIVE LIGHTING PLAN

CALLAWAY DRIVE
CITY OF CARLSBAD
CARLSBAD, NEW MEXICO

E-102
SHEET

I:\CARLSBAD\CRS133-12-Callaway Design\DWG\ECA133-102-104.dwg

© COPYRIGHT

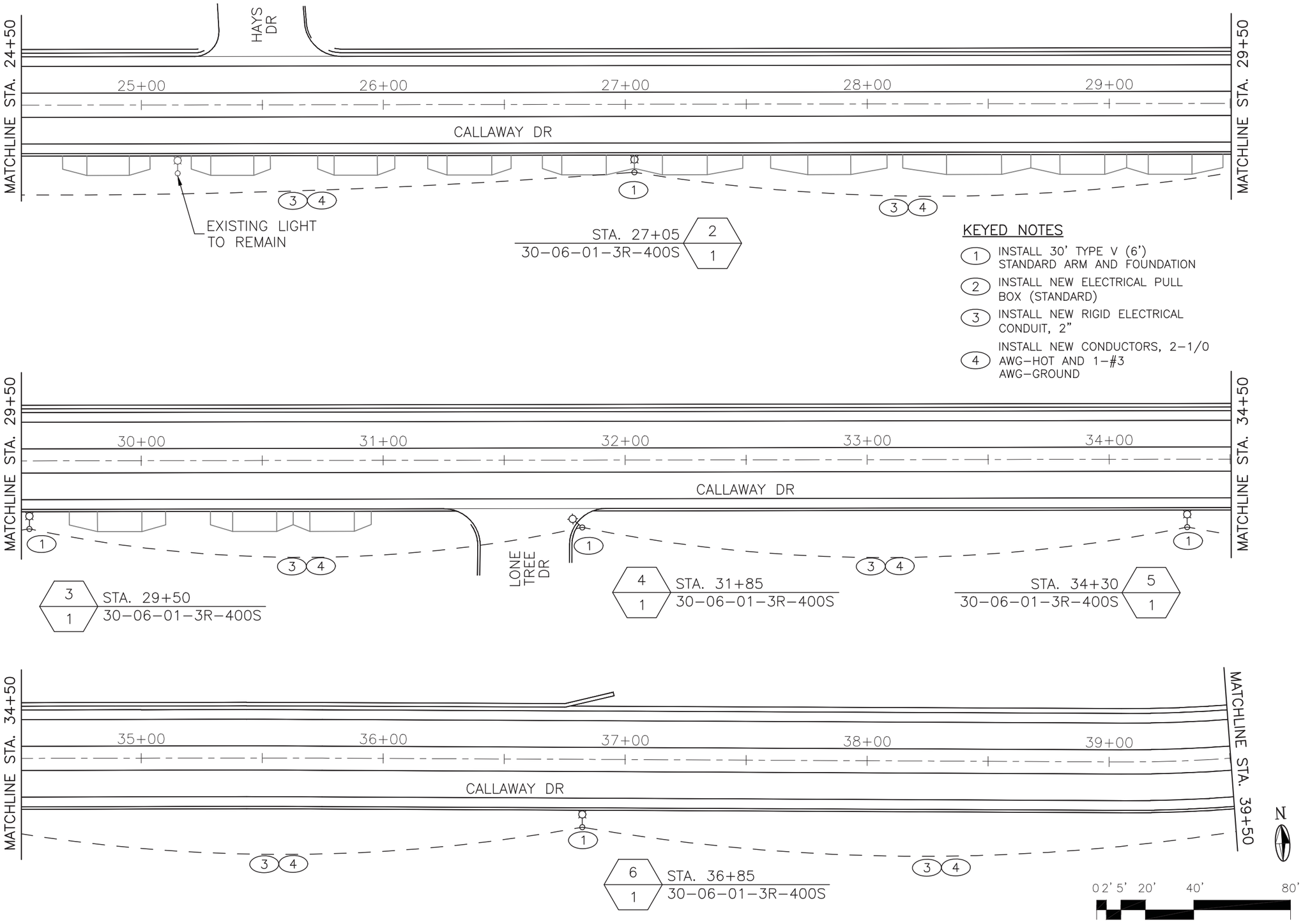

KEYED NOTES

1. INSTALL 30' TYPE V (6') STANDARD ARM AND FOUNDATION
2. INSTALL NEW ELECTRICAL PULL BOX (STANDARD)
3. INSTALL NEW RIGID ELECTRICAL CONDUIT, 2"
4. INSTALL NEW CONDUCTORS, 2-1/0 AWG-HOT AND 1-#3 AWG-GROUND

MOLZENCORBIN
1155 Commerce Dr., Suite F
Las Cruces, New Mexico 88011
575 522 0049 office
575 522 7884 fax
MolzenCorbin.com

WYATT D. KARTCHNER
NEW MEXICO
20843
REGISTERED PROFESSIONAL ENGINEER
2/23/16

REV NO	REV DATE	DESCRIPTION
1	2/23/16	ROAD AND DRAIN REVISIONS

PROJECT NUMBER: CRS133-12
DESIGNED BY: WDK
DRAWN BY: EG
CHECKED BY: JTM
PROJ ENGINEER: WDK
PROJECT DATE: OCTOBER 2015

CALLAWAY DRIVE LIGHTING PLAN

CALLAWAY DRIVE
CITY OF CARLSBAD
CARLSBAD, NEW MEXICO

E-103
SHEET

I:\CARLSBAD\CRS133-12-Callaway Design\DWG\ECA133-102-104.dwg

© COPYRIGHT

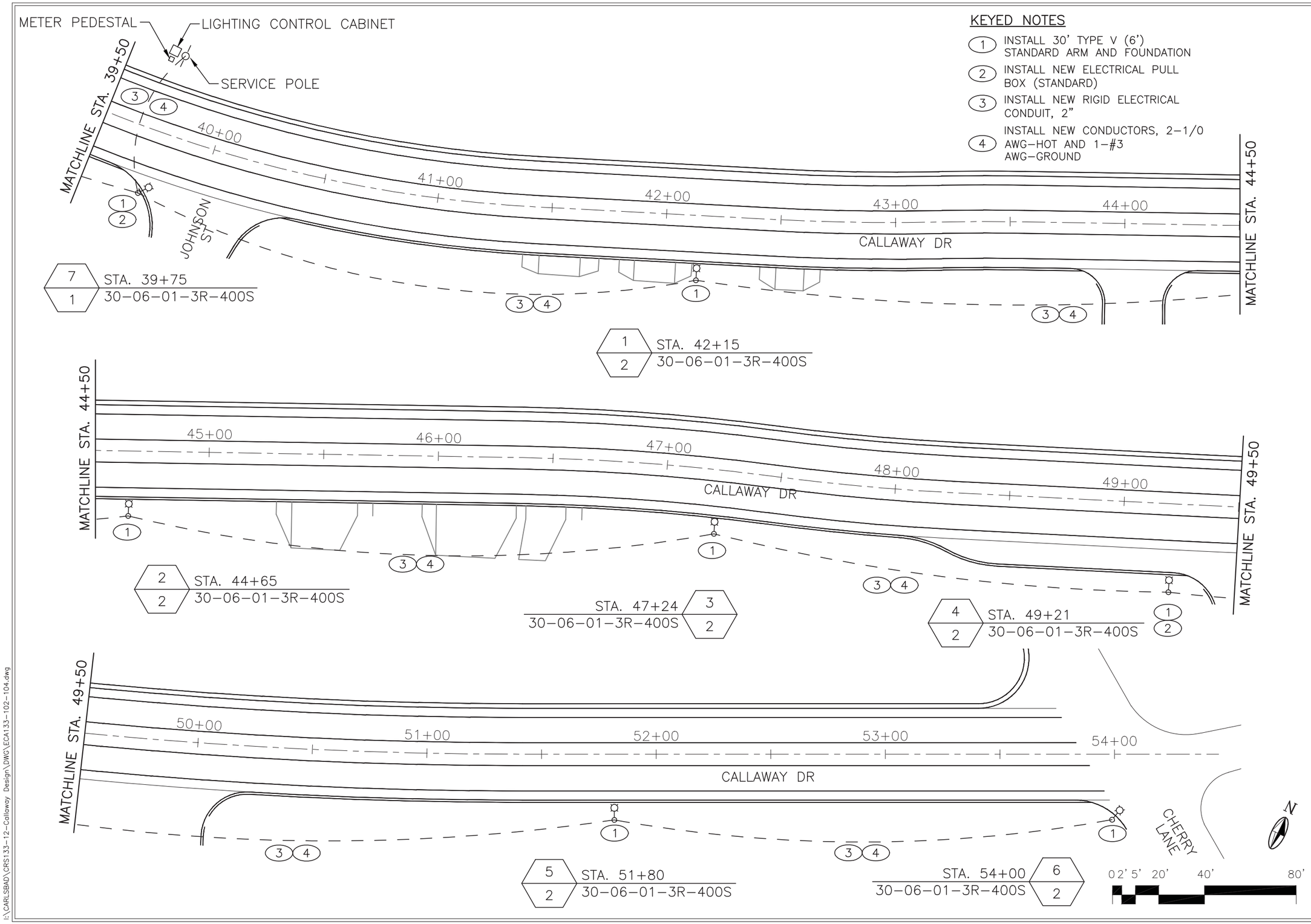

KEYED NOTES

1. INSTALL 30' TYPE V (6') STANDARD ARM AND FOUNDATION
2. INSTALL NEW ELECTRICAL PULL BOX (STANDARD)
3. INSTALL NEW RIGID ELECTRICAL CONDUIT, 2"
4. INSTALL NEW CONDUCTORS, 2-1/0 AWG-HOT AND 1-#3 AWG-GROUND

MOLZENCORBIN
1155 Commerce Dr., Suite F
Las Cruces, New Mexico 88011
575 522 0049 office
575 522 7884 fax
MolzenCorbin.com

WYATT D. KARTCHNER
NEW MEXICO
20843
REGISTERED PROFESSIONAL ENGINEER
2/23/16

REV NO	REV DATE	DESCRIPTION
1	2/23/16	ROAD AND DRAIN REVISIONS

PROJECT NUMBER: CRS133-12
DESIGNED BY: WDK
DRAWN BY: EG
CHECKED BY: JTM
PROJ ENGINEER: WDK
PROJECT DATE: OCTOBER 2015

CALLAWAY DRIVE LIGHTING PLAN

CALLAWAY DRIVE
CITY OF CARLSBAD
CARLSBAD, NEW MEXICO

E-104
SHEET

I:\CARLSBAD\CRS133-12-Callaway Design\DWG\ECA133-102-104.dwg

© COPYRIGHT

DESIGN DATA

DESIGN IS IN ACCORDANCE WITH THE AASHTO LRFD SPECIFICATIONS, 7TH EDITION 2014 AND ALL CURRENT INTERIM SPECIFICATIONS.

DESIGN STRESSES:

SUPERSTRUCTURE: f'c = 4000 psi @ 28 DAYS
fy = 60 ksi GRADE 60 EPOXY COATED BARS

SUBSTRUCTURE: f'c = 3000 psi @ 28 DAYS
fy = 60 ksi GRADE 60 BARS

LIVE LOAD: HL-93

WEARING SURFACE: 30 psf ALLOWANCE FOR FUTURE WEARING SURFACES.

HORIZONTAL EARTH PRESSURE
(EQUIVALENT FLUID PRESSURES):

ACTIVE PRESSURE:	36 pcf
AT-REST PRESSURE:	55 pcf
PASSIVE PRESSURE:	360 pcf

SEISMIC DATA:

SEISMIC ZONE =	1
SITE CLASS =	D
PGA =	0.047 g
S_{DS} =	0.160 g
S_{D1} =	0.069 g

WIND VELOCITY: 100 psf

GENERAL NOTES

1. WORKMANSHIP AND MATERIALS SHALL CONFORM TO THE NEW MEXICO DEPARTMENT OF TRANSPORTATION (NMDOT) STANDARD SPECIFICATIONS FOR HIGHWAY AND BRIDGE CONSTRUCTION 2014 EDITION AND APPLICABLE SPECIAL PROVISIONS.

2. CONCRETE: SUPERSTRUCTURE CONCRETE SHALL BE HIGH PERFORMANCE CONCRETE (HPD) AND SUBSTRUCTURE CONCRETE SHALL BE CLASS A. CHAMFER ALL EXPOSED EDGES OF STRUCTURES 3/4" UNLESS NOTED OTHERWISE.

3. DECK SLAB: THE SURFACE OF THE DECK SHALL BE MACHINE-GROOVED IN ACCORDANCE WITH THE SPECIFICATION REQUIREMENTS FOR GROOVING HARDENED CONCRETE. GROOVING SHALL BE CONSIDERED INCIDENTAL TO THE COMPLETION OF THE PROJECT.

4. THE CONTRACTOR SHALL VERIFY IN THE FIELD THE LOCATIONS OF ALL EXISTING UTILITIES, CABLES, PIPES OR CONDUITS WHICH MUST BE RELOCATED OR PROTECTED FROM DAMAGE BEFORE PROCEEDING WITH THE WORK. THE LOCATION AND PROTECTION OF EXISTING UTILITIES WILL BE INCIDENTAL TO THE COMPLETION OF THE PROJECT.

5. SUPERSTRUCTURE REINFORCEMENT SHALL BE EPOXY COATED ASTM A615 GRADE 60. SUBSTRUCTURE REINFORCEMENT SHALL BE ASTM A615 GRADE 60. DIMENSIONS SHOWN REFER TO THE CENTERLINES OF BARS UNLESS NOTED OTHERWISE. ALL REINFORCING SHALL BE STORED ABOVE GROUND ON PLATFORM SKIDS OR OTHER SUPPORTS. REINFORCING SHALL BE KEPT FREE FROM DIRT, GREASE AND OTHER FOREIGN MATTER. REINFORCING SHALL BE KEPT FREE OF CORROSION AS MUCH AS IS PRACTICAL.

6. A PENETRATING WATER REPELLANT IS TO BE APPLIED TO CONCRETE SURFACES IN ACCORDANCE WITH SECTION 511.3.9.6. TREATMENT SHALL EXTEND 1'-0" BELOW GRADE WHERE APPLICABLE. PENETRATING WATER REPELLANT IS TO BE CONSIDERED INCIDENTAL TO THE CONCRETE.

7. THE CONTRACTOR SHALL VERIFY IN THE FIELD ALL DIMENSIONS, ELEVATIONS AND DETAILS WHICH WILL BE INVOLVED IN THE NEW CONSTRUCTION BEFORE PROCEEDING WITH NEW WORK.

8. CONCRETE SURFACES SHALL RECEIVE A "CLASS 2" RUBBED SURFACE FINISH OR AS DIRECTED BY THE PROJECT MANAGER.

9. THE CONTRACTOR SHALL PROVIDE SHOP DRAWINGS FOR ALL REINFORCING TO THE ENGINEER FOR REVIEW AND COMMENT.

10. THE CONTRACTOR SHALL, AT ALL TIMES, PROTECT THE EXISTING CARLSBAD IRRIGATION DISTRICT (CID) CHANNEL DURING REMOVAL AND CONSTRUCTION OPERATIONS. AND COST ASSOCIATED WITH THE PROTECTION SHALL BE CONSIDERED INCIDENTAL TO THE COMPLETION OF THE PROJECT. ANY DAMAGE TO THE CID CANNEL CAUSED BY THE CONTRACTOR'S OPERATIONS SHALL BE REPAIRED IMMEDIATELY BY THE CONTRACTOR TO THE SATISFACTION OF CID AT NO ADDITIONAL COST TO THE CITY OF CARLSBAD OR CID.

STANDARD DRAWINGS REQUIRED

210-01-1/1	EXCAVATION AND BACKFILL FOR BRIDGES, WALLS AND CBC'S
543-03-1/2-2/2	METAL RAILING TYPE "D"

INDEX OF SHEETS

S-100	BRIDGE GENERAL NOTES
S-101	STRUCTURE LOCATION PLAN
S-102	STRUCTURE PROFILE AND SECTION
S-103	MODIFIED CONCRETE WALL BARRIER

SPECIAL PROVISIONS

SECTION 210 EXCAVATION AND BACKFILL FOR MAJOR STRUCTURES, DATED JANUARY 29, 2015
SECTION 512 SUPERSTRUCTURE CONCRETE, DATED FEBRUARY 2, 2015
SECTION 532 PENETRATING WATER REPELLANT, DATED MARCH 4, 2015

FOUNDATIONS

A SUBSURFACE SOIL INVESTIGATION HAS BEEN PERFORMED BY AMEC FOSTER WHEELER, PROJECT NO. 15-517-00049 DATED JULY 31, 2015. THE CONTRACTOR SHALL OBTAIN, REVIEW AND COMPLY WITH THE REPORT.

QUANTITIES

ITEM NO.	ITEM DESCRIPTION	UNIT	SUPER-STRUCTURE	SUBSTRUCTURE ABUT. 1	SUBSTRUCTURE ABUT. 2	TOTALS
210000	EXCAVATION & BACKFILL FOR MAJOR STRUCTURES	CU.YD.		7	4	11
511300	SUBSTRUCTURE CONCRETE CLASS A*	CU.YD.		4	7	11
512003	HIGH PERFORMANCE DECK CONCRETE (HPD)*	CU.YD.	36			36
543030	METAL RAILING, TYPE D**	LIN.FT.	32			32
601000	REMOVAL OF STRUCTURES AND OBSTRUCTIONS	L.S.				1

* REINFORCING SHALL BE INCIDENTAL TO CONCETE.
**THRIE-BEAM END TREATMENT RAILING SHALL BE INCIDENTAL TO METAL RAILING, TYPE D.

Bohannan Huston
www.bhinc.com 800.877.5332

NOTICE OF EXTENDED PAYMENT PROVISION:
THIS CONTRACT ALLOWS THE OWNER TO MAKE PAYMENT WITHIN 45 DAYS AFTER SUBMISSION OF AN UNDISPUTED REQUEST FOR PAYMENT

GARY E. LANDON
NEW MEXICO
NO. 17757
REGISTERED PROFESSIONAL ENGINEER
10/14/15

REV. NO.	REV. DATE	DESCRIPTION

PROJECT NUMBER: CRS143-12
DESIGNED BY: JEC
DRAWN BY: JEC
CHECKED BY: GEL
PROJECT DATE: OCTOBER 2015

BRIDGE GENERAL NOTES

CALLAWAY DRIVE
CITY OF CARLSBAD
CARLSBAD, NEW MEXICO

S-100
SHEET

TITLE BLOCK
3/26/15

© COPYRIGHT

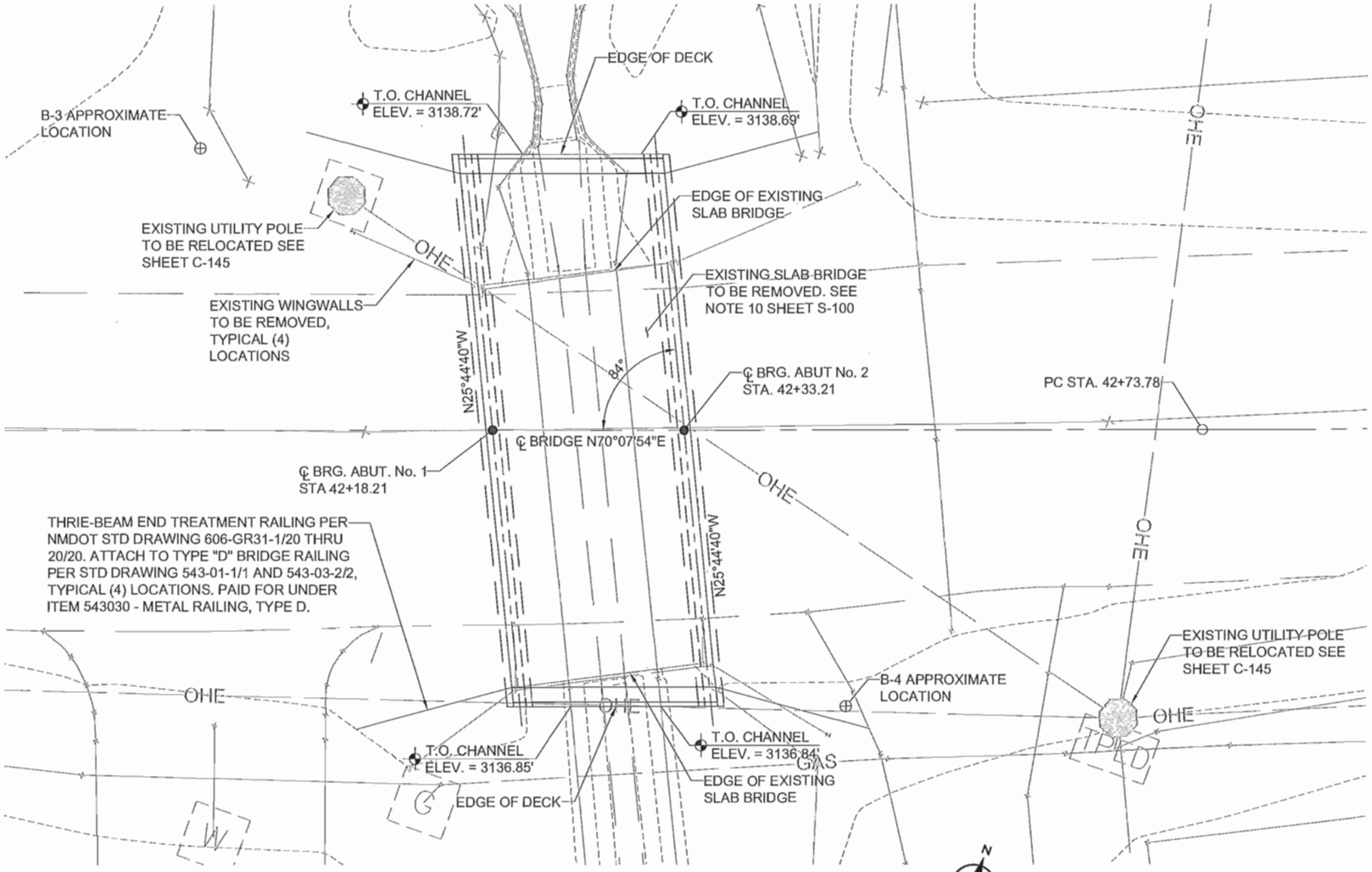

LOCATION PLAN

HORIZONTAL CURVE DATA

Bohannan Huston
www.bhinc.com 800.877.5332

NOTICE OF EXTENDED PAYMENT PROVISION:
THIS CONTRACT ALLOWS THE OWNER TO MAKE PAYMENT WITHIN 45 DAYS AFTER SUBMISSION OF AN UNDISPUTED REQUEST FOR PAYMENT

GARY E. LANDON
NEW MEXICO
No. 7757
REGISTERED PROFESSIONAL ENGINEER

REV NO	REV DATE	DESCRIPTION

PROJECT NUMBER: CRS143-12
DESIGNED BY:
DRAWN BY:
CHECKED BY:
PROJECT DATE: OCTOBER 2015

STRUCTURE LOCATION PLAN

CALLAWAY DRIVE
CITY OF CARLSBAD
CARLSBAD, NEW MEXICO

S-101
SHEET

TITLE BLOCK 3/26/15

© COPYRIGHT

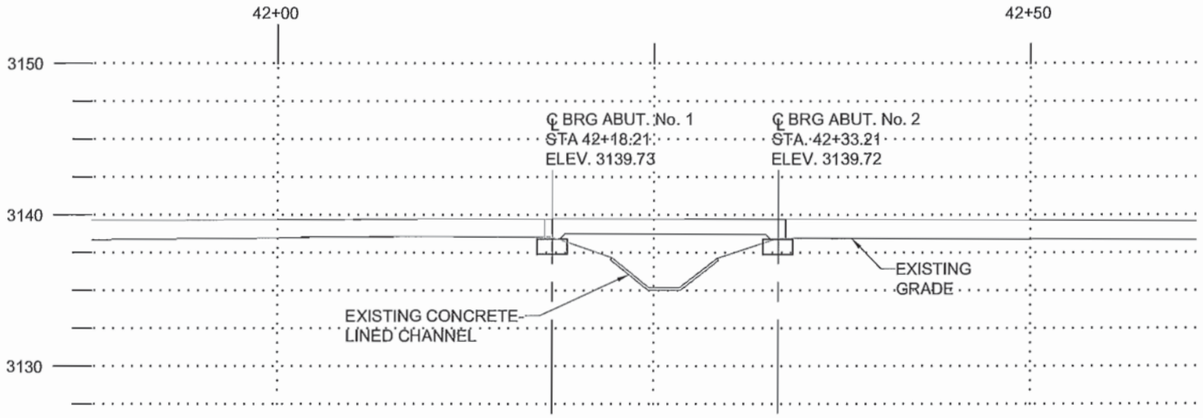

PROFILE @ PGL

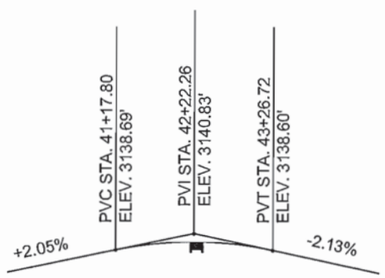

VERTICAL CURVE DATA

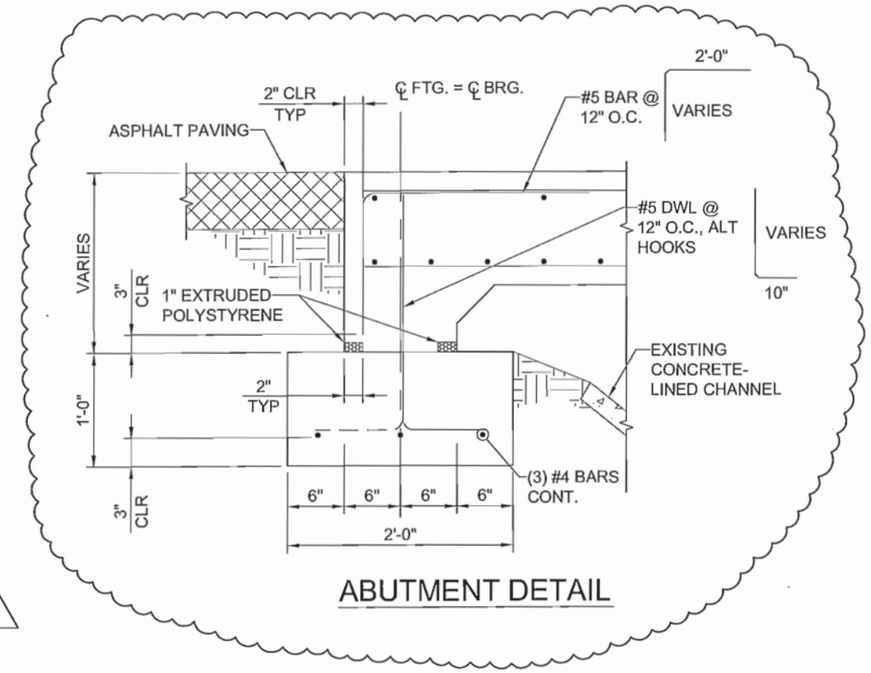

ABUTMENT DETAIL

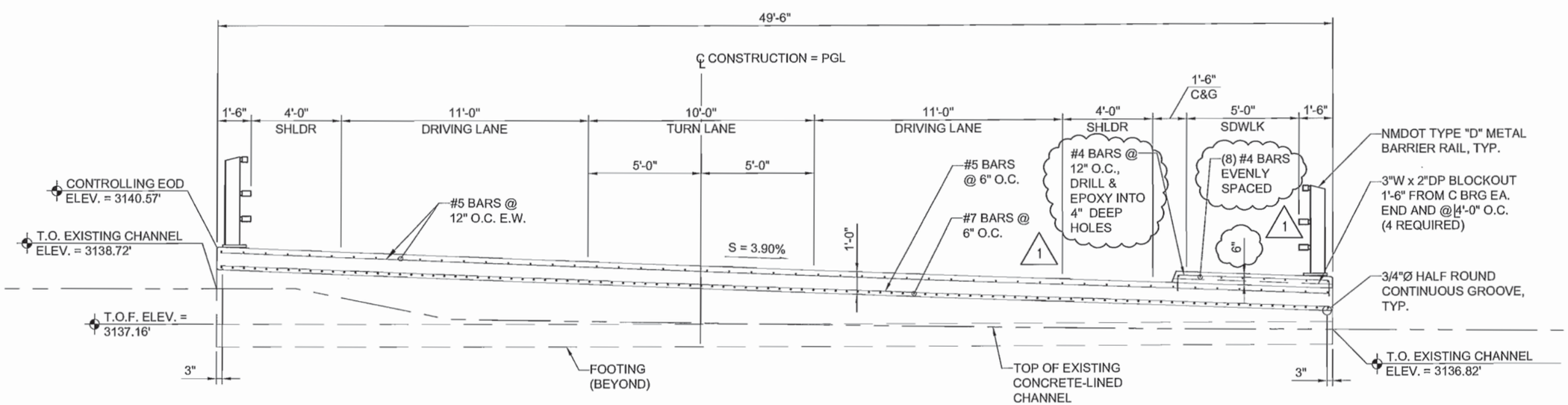

TYPICAL SECTION

Bohannan Huston
www.bhinc.com 800.877.5332

NOTICE OF EXTENDED PAYMENT PROVISION:
THIS CONTRACT ALLOWS THE OWNER TO MAKE PAYMENT WITHIN 45 DAYS AFTER SUBMISSION OF AN UNDISPUTED REQUEST FOR PAYMENT

GARY E. LANDON
NEW MEXICO
No. 7757
REGISTERED PROFESSIONAL ENGINEER
11/12/15

REV NO	REV DATE	DESCRIPTION
1	11/12/15	ADDED REINF. CALLOUTS

PROJECT NUMBER: CRS143-12
DESIGNED BY: JEC
DRAWN BY: JEC
CHECKED BY: GEL
PROJECT DATE: OCTOBER 2015

STRUCTURE PROFILE AND SECTION

CALLAWAY DRIVE
CITY OF CARLSBAD
CARLSBAD, NEW MEXICO

S-102
SHEET

TITLE BLOCK
3/26/15

© COPYRIGHT

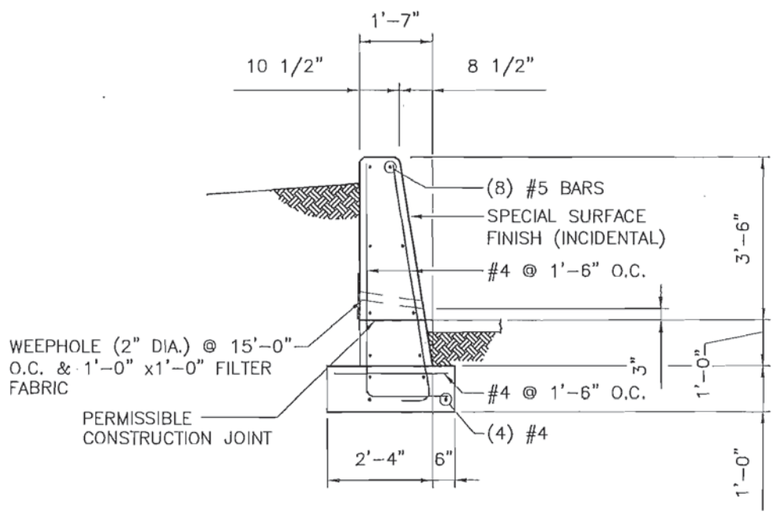

CONCRETE WALL BARRIER (MODIFIED RETAINING WALL) 42" CWB DETAILS

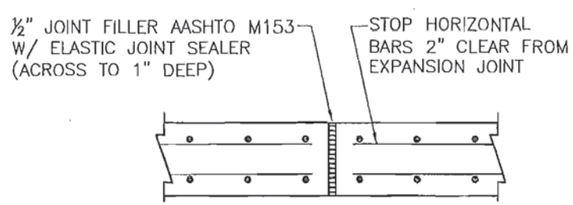

EXPANSION JOINT DETAIL

NOTES:

1. ALL WORK SHALL BE DONE IN ACCORDANCE WITH THE NMDOT STANDARD SPECIFICATIONS FOR HIGHWAY AND BRIDGE CONSTRUCTION, 2014 EDITION.
2. CONCRETE SHALL BE CLASS 'A'.
3. ALL CWB RETAINING WALLS WILL BE PAID FOR UNDER BID ITEM #606595 CONCRETE WALL BARRIER (MODIFIED SECTION) PER LINEAR FOOT. REBAR AND ADDITIONAL CONCRETE FOR FOOTINGS SHALL BE INCIDENTAL TO THE UNIT BID ITEM.
4. SEE TYPICAL ROADWAY SECTIONS FOR DIMENSIONS OF SWALE BEHIND WALL.
5. CHAMFER ALL EXPOSED EDGES ¾".
6. CONCRETE COVER FOR REINFORCING BARS SHALL BE A MINIMUM OF 2 INCH COVER. ALL REINFORCING SHALL BE EPOXY COATED.
7. PROVIDE CONTRACTION JOINTS AT 30 FEET MAXIMUM INTERVALS. CONTRACTION JOINTS SHALL BE MADE USING COLD JOINT, TOOLED JOINTS, OR SAW CUTS. SAW CUT JOINTS SHALL BE SEALED WITH A SILICON SEALANT APPROVED BY THE PROJECT MANAGER. ALTERNATE TRANSVERSE JOINT SPACING WITH WEEP HOLE SPACING.
8. EXPANSION JOINTS SHALL BE LOCATED AT 90 FEET MAXIMUM INTERVALS. SEE DETAIL THIS SHEET. EXPANSION JOINT FILLER SHALL BE INCIDENTAL TO ITEM. #606595 CONCRETE WALL BARRIER (MODIFIED).
9. ADDITIONAL STEEL REINFORCING REQUIRED BY THE CONTRACTOR FOR CONSTRUCTION OF THE BARRIER WALL SHALL BE INCIDENTAL TO THE UNIT PRICE FOR CONCRETE WALL BARRIER.
10. CWB SHALL BE INSTALLED BY EITHER SLIP-FORMING OR CASTING-IN-PLACE. PRECAST SECTION INSTALLATION IS NOT PERMITTED.
11. THE LONGITUDINAL REBARS MAY BE SUBSTITUTED WITH WELDED DEFORMED WIRE FABRIC (ASTM A497, fy = 70,000 PSI) WITH AN EQUIVALENT AREA OF STEEL. THE CAGE SHALL REMAIN IN THE INTENDED POSITION DURING CONSTRUCTION.

DESIGN DATA:

ALLOWABLE SOIL BEARING PRESSURE	= 5500 PSF
SOIL COEFFICIENT OF FRICTION	= 0.33
EQUIVALENT FLUID PRESSURE	
ACTIVE	= 54 PCF (W/ BACKSLOPE)
	= 43 PCF (LEVEL BACK SLOPE)
AT-REST	= 55 PSF
PASSIVE	= 280 PSF
SOIL UNIT WEIGHT	= 110 PCF

Bohannan Huston
www.bhinc.com 800.877.5332

NOTICE OF EXTENDED PAYMENT PROVISION: THIS CONTRACT ALLOWS THE OWNER TO MAKE PAYMENT WITHIN 45 DAYS AFTER SUBMISSION OF AN UNDISPUTED REQUEST FOR PAYMENT

GARY E. LANDERS No. 7757 REGISTERED PROFESSIONAL ENGINEER
10/12/15

REV NO	REV DATE	DESCRIPTION

PROJECT NUMBER: CRS143-12
DESIGNED BY: JEC
DRAWN BY: JEC
CHECKED BY: GEL
PROJECT DATE: OCTOBER 2015

MODIFIED CONCRETE WALL BARRIER

CALLAWAY DRIVE
CITY OF CARLSBAD
CARLSBAD, NEW MEXICO

S-103
SHEET

© COPYRIGHT

TITLE BLOCK 3/26/15

GENERAL NOTES

1. DESIGN CONFORMS TO 2009 (5th EDITION) AASHTO STANDARD SPECIFICATIONS FOR STRUCTURAL SUPPORTS FOR HIGHWAY SIGNS, LUMINAIRES AND TRAFFIC SIGNALS.

2. DESIGN CRITERIA:

   RECURRENCE INTERVAL = 50 YRS
   SERVICE LIFE = 50 YRS
   DESIGN WIND SPEED = 90 MPH
   GUST EFFECT FACTOR = 1.14

   MAXIMUM NUMBER OF LUMINAIRES IS ONE (1) PER ARM. MAXIMUM WEIGHT OF EACH LUMINAIRE IS 44 LBS. WITH AN EFFECTIVE PROJECTED AREA OF 1.44 FT²

   MAXIMUM ALLOWABLE DEFLECTION AT DESIGN WIND SPEED = 9% OF POLE HEIGHT

3. WORKMANSHIP AND MATERIALS SHALL CONFORM TO NEW MEXICO DEPARTMENT OF TRANSPORTATION (NMDOT) STANDARD SPECIFICATIONS FOR HIGHWAY AND BRIDGE CONSTRUCTION CURRENT EDITION. CONTRACTOR SHALL CONTACT NMDOT FOR APPROVED PRODUCTS LISTING.

4. POLES SHALL CONSIST OF SINGLE ROUND TUBE SECTIONS, TAPERED AS INDICATED ON THE TABLE OF VARIABLE POLE DIMENSIONS. MULTI-SIDED SECTIONS WILL BE PERMITTED AS AN ALTERNATE DESIGN. SEE NOTE 10 FOR ALTERNATE DESIGN REQUIREMENTS.

5. MATERIALS:

   A. STEEL POLES AND ARMS SHALL BE OF 50 KSI MINIMUM YIELD STRENGTH AFTER FABRICATION.

   B. ALUMINUM POLES AND ARMS SHALL BE FABRICATED FROM 6061-T4 ALLOY TUBE MATERIALS CONFORMING TO ASTM B 221. ALLOY 6063 IS TO BE FURNISHED IN T6 CONDITION AND HEAT-TREATED IN ACCORDANCE WITH ASTM B 597.

   C. ALUMINUM POLES AND ARMS SHALL BE FURNISHED WITH A 50 GRIT SATIN GROUND FINISH.

   D. STEEL BASE PLATES AND ANCHOR BOLT TEMPLATES SHALL BE PER ASTM A 36. ALUMINUM POLE BASES SHALL BE CAST FROM 356 ALLOY IN ACCORDANCE WITH ASTM B26 OR B108.

   E. ANCHOR BOLTS AND ASSOCIATED HARDWARE SHALL BE PER AASHTO M 314 (ASTM F 1554), GRADE 55. EACH BOLT SHALL BE SUPPLIED WITH A MINIMUM OF THREE HEAVY HEX NUTS AND TWO FLAT WASHERS. STEEL BOLT TEMPLATES SHALL BE SUPPLIED WITH ANCHOR BOLTS. NUTS SHALL BE ASTM A 563 GRADE DH. WASHERS SHALL BE ASTM F 436.

   F. PRELOAD BOLTS BASED ON BOLT TYPE AND DIAMETER. PROVIDE LOCKING ADHESIVE (NO INDUSTRIES, NYLOCK, LOCKTITE, OR APPROVED EQUAL).

   G. TENON CONNECTIONS BOLTS SHALL BE A 325 (STEEL POLES) OR 300 SERIES STAINLESS STEEL (ALUMINUM POLE).

6. GALVANIZING:

   A. POLES AND PLATES SHALL BE GALVANIZED PER AASHTO M 111 94 (ASTM A 123).

   B. HARDWARE AND ANCHOR BOLTS SHALL BE HOT-DIPPED GALVANIZED PER AASHTO M 232 M (ASTM A 153).

7. WELDS:

   A. ALL FABRICATORS SHALL BE CERTIFIED UNDER NMDOT SPECIFICATION SECTION 541.3 "CERTIFICATION OF STEEL FABRICATORS", AND SHALL CONFORM TO SECTION 707 "SIGNAL AND LIGHTING STANDARDS" OF THE CURRENT NEW MEXICO DEPARTMENT OF TRANSPORTATION (NMDOT) STANDARD SPECIFICATIONS AND SPECIAL PROVISIONS OR MEET THE DATA SHOWN ON THESE DRAWINGS.

   B. STEEL WELDING SHALL CONFORM TO THE LATEST EDITION OF THE STRUCTURAL WELDING CODE (ANSI/AWS D1.1).

   C. ALUMINUM WELDING SHALL CONFORM TO AMERICAN WELDING SOCIETY STRUCTURAL WELDING CODE (ALUMINUM) ANSI/AWS D1.2 (CURRENT EDITION).

8. POLES, ARMS, AND TENONS SHALL BE FREE OF INTERNAL AND EXTERNAL OBSTRUCTIONS WHICH WOULD INTERFERE WITH WIRES OR THE PROPER OPERATION OF ANY OTHER ELECTRICAL COMPONENT.

9. THE CONTRACTOR/FABRICATOR SHALL FURNISH EIGHT (8) SETS OF SHOP DRAWINGS OF ALL SUPPORT STRUCTURE COMPONENTS FOR THE TYPE V LIGHTING STANDARD TO THE STATE BRIDGE ENGINEER FOR APPROVAL. SHOP DRAWINGS SHALL COVER ALL PARTS REQUIRED FOR THE INSTALLATION. THE CONTRACTOR SHALL FURNISH AN APPROPRIATE CERTIFICATION OF COMPLIANCE WITH ALL DESIGN REQUIREMENTS. THE CONTRACTOR'S CERTIFICATION SHALL APPEAR ON THE DRAWINGS. THE CONTRACTOR MUST RECEIVE WRITTEN APPROVAL OF THE SHOP DRAWINGS FROM THE ENGINEER PRIOR TO BEGINNING FABRICATION OR ASSEMBLY OF UNITS.

10. THE INFORMATION AND DETAILS PROVIDED FOR POLES, ARMS, ANCHOR BOLTS, HAND HOLE, AND FOUNDATIONS IN THESE STANDARDS ARE MINIMUM REQUIREMENTS. DESIGN AND DETAILS FOR ALTERNATE DESIGNS AND ALL OTHER LUMINAIRE SUPPORT STRUCTURE COMPONENTS SHALL BE PROVIDED BY CONTRACTOR/FABRICATOR IN COMPLIANCE WITH THE AASHTO STANDARD SPECIFICATIONS FOR STRUCTURAL SUPPORTS FOR HIGHWAY SIGNS, LUMINAIRES, AND TRAFFIC SIGNALS, 5TH EDITION, WITH 2010 AND 2011 INTERIMS AND ALL OTHER GOVERNING ELECTRICAL AND MECHANICAL SPECIFICATIONS.

11. GROUTING SHALL BE IN ACCORDANCE WITH SECTION 523 OF THE STANDARD SPECIFICATIONS.

12. DETAILS SHOWN ARE FOR STEEL POLES UNLESS NOTED OTHERWISE. ALTERNATE PRE-APPROVED ALUMINUM POLE ASSEMBLIES MAY BE USED. ALUMINUM STANDARDS MAY UTILIZE EITHER AN APPROVED ALUMINUM BASE OR BREAKAWAY COUPLINGS WHICH WILL BE CONSIDERED INCIDENTAL TO THE LIGHTING STANDARD.

13. STRUCTURAL REQUIREMENTS SHOWN ON TABLES AND DETAILS IN THESE PLANS SHALL APPLY TO BOTH SINGLE AND DOUBLE-ARM CONFIGURATIONS.

14. CONTRACTOR SHALL PROVIDE COPIES OF ALL TYPE V LIGHTING SYSTEM TECHNICAL DATA, CALCULATIONS, SHOP DRAWINGS, AND LUMINAIRE TYPE INFORMATION TO THE LOCAL MAINTAINING AGENCY AND THE LOCAL POWER COMPANY.

15. THE DESIGN PROVIDED FOR THIS STANDARD MUST BE RE-EVALUATED FOR POLES LOCATED IN ELEVATED REGIONS AND POLES LOCATED IN SPECIAL WIND REGIONS EXCEEDING THE DESIGN CRITERIA PROVIDED IN THESE STANDARDS.

16. GROUNDING SHALL BE PER MANUFACTURER RECOMMENDATION AND SHALL BE SHOWN WITH SHOP DRAWINGS.

17. ALL DESIGNS SUBMITTED FOR APPROVAL MUST BE SIGNED AND SEALED BY A LICENSED ENGINEER IN THE STATE OF NEW MEXICO.

18. REFER TO THE CURRENT NMDOT APPROVED PRODUCT LIST FOR ACCEPTABLE MANUFACTURERS AND MODELS FOR POLES, LUMINAIRES, BREAKAWAY ASSEMBLIES, AND ORNAMENTAL LIGHTING COMPONENTS.

JOHN M. GLOTIACIO
NEW MEXICO
19258
PROFESSIONAL ENGINEER
10/25/11

	DATE	BY	DESCRIPTION

REVISIONS (OR CHANGES) NOTED

NEW MEXICO DEPARTMENT OF TRANSPORTATION STANDARD DRAWING

ROADWAY LIGHTING SUPPORT STRUCTURES TYPE V

GENERAL NOTES

DESIGNED BY: JM DRAWN BY: EJE CHECKED BY: JM

707L-07-1/11 1 of 11

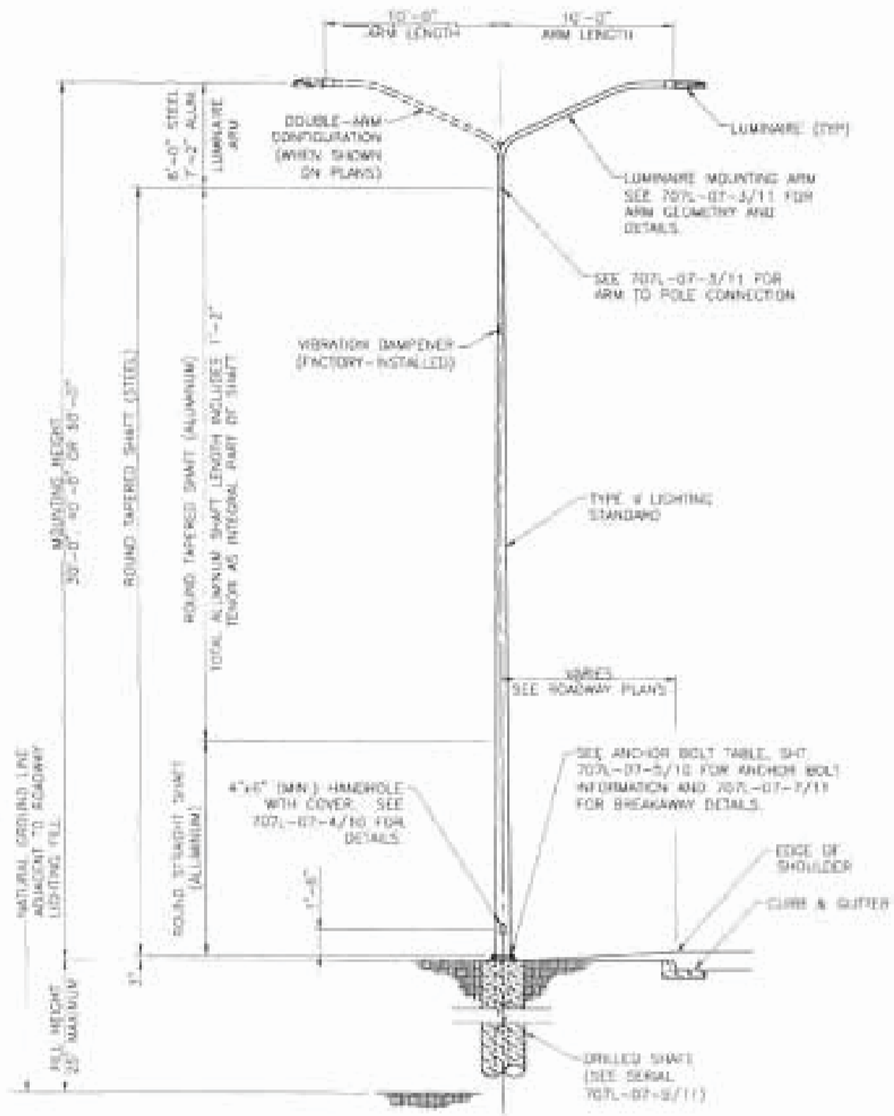

ROADWAY LIGHTING TYPE V POLE ELEVATION

NOT TO SCALE

TABLE OF VARIABLE POLE DIMENSIONS (STEEL)

MOUNTING HEIGHT	ARM CONFIGURATION	TAPERED SHAFT LENGTH	RATE OF TAPER (IN/FT)	OUTSIDE DIAMETER (IN) BOTTOM	OUTSIDE DIAMETER (IN) TOP	MIN SHAFT SECTION THICKNESS (IN)
30'-0"	SINGLE	23'-9"	0.14	9.625	3.50	0.125
	DOUBLE					0.125
40'-0"	SINGLE	33'-9"	0.14	9.625	3.50	0.125
	DOUBLE					0.125
50'-0"	SINGLE	43'-9"	0.14	9.625	3.50	0.125
	DOUBLE					0.156

TABLE OF VARIABLE POLE DIMENSIONS (ALUMINUM)

MOUNTING HEIGHT	ARM CONFIGURATION	MAX TAPERED SHAFT LENGTH	TOTAL SHAFT LENGTH*	OUTSIDE DIAMETER (IN) BOTTOM	OUTSIDE DIAMETER (IN) TOP	MIN SHAFT SECTION THICKNESS (IN)
30'-0"	SINGLE	22'-7"	24'-0"	8.00	4.50	0.156
	DOUBLE					0.188
40'-0"	SINGLE	30'-0"	34'-0"	8.00	4.50	0.219
	DOUBLE					0.313
50'-0"	SINGLE	38'-0"	44'-0"	10.00	4.50	0.188
	DOUBLE					0.281

SERVICE LOADS AT TOP OF DRILLED SHAFT

MOUNTING HEIGHT	AXIAL "P"	SHEAR "V"	MOMENT "M"	TORSION "T"
(FT)	(KIP)	(KIP)	(KIP-FT)	(KIP-FT)
50	0.71	0.88	30.67	1.09
40	0.48	0.69	18.77	1.07
30	0.38	0.57	12.00	1.05
30 ORNAMENTAL	0.79	1.24	21.68	0.98

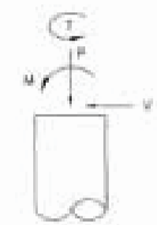

JOHN WILL ACCIO
NEW MEXICO
18258
PROFESSIONAL ENGINEER
10/25/11

	DATE	BY	DESCRIPTION

REVISION FOR CHANGE NOTICE

NEW MEXICO DEPARTMENT OF TRANSPORTATION STANDARD DRAWING

ROADWAY LIGHTING SUPPORT STRUCTURES TYPE V

POLE ELEVATION AND DIMENSIONS

DESIGNED BY JJM DRAWN BY CRG CHECKED BY JJM

707L-07-2/11 2 OF 11

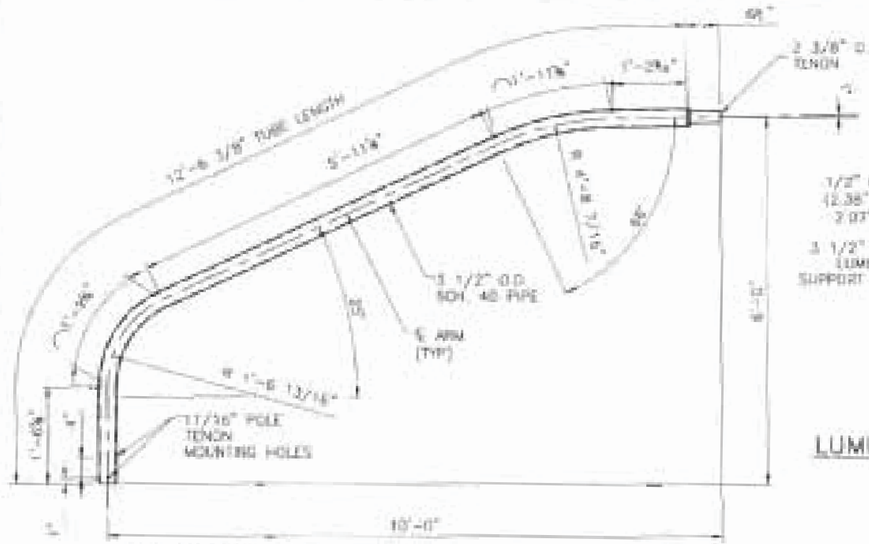

LUMINAIRE SUPPORT ARM GEOMETRY (STEEL)
NOT TO SCALE

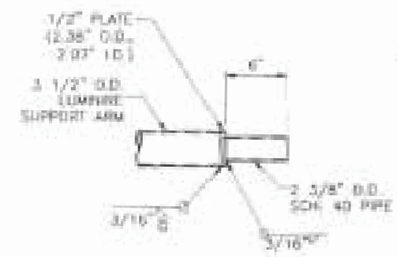

LUMINAIRE TENON (STEEL)
NOT TO SCALE

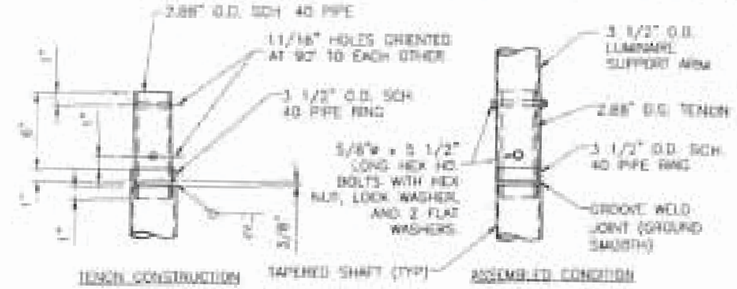

POLE TENON (STEEL)
NOT TO SCALE

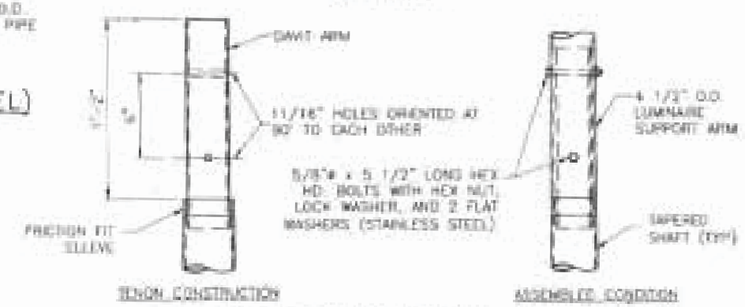

POLE TENON (ALUMINUM)
NOT TO SCALE

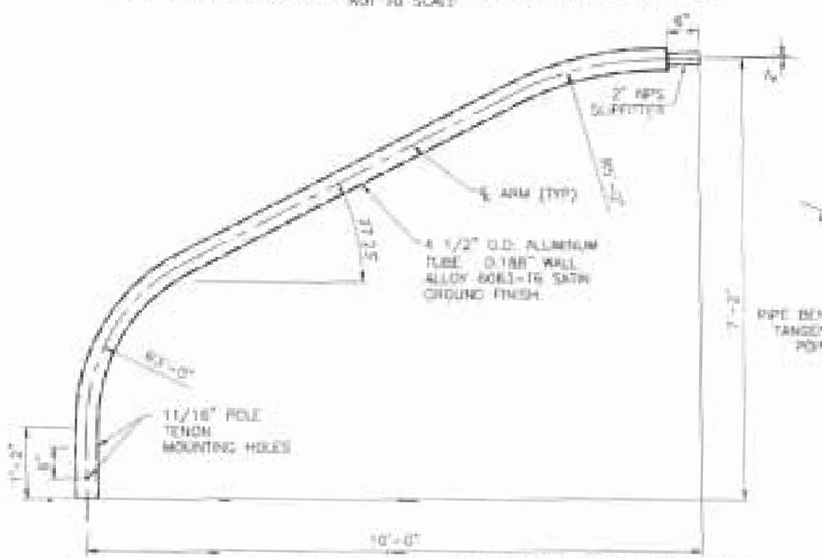

LUMINAIRE SUPPORT ARM GEOMETRY (ALUMINUM)
NOT TO SCALE

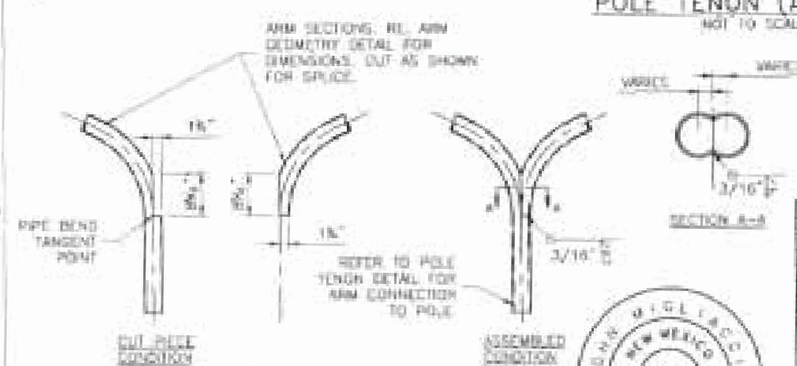

DOUBLE ARM SPLICE (STEEL)
NOT TO SCALE

JOHN GIGLIACCIO
NEW MEXICO
18258
PROFESSIONAL ENGINEER
10/25/11

DATE	BY	DESCRIPTION

REVISIONS SHOWN ON THIS SHEET

NEW MEXICO DEPARTMENT OF TRANSPORTATION STANDARD DRAWING

ROADWAY LIGHTING SUPPORT STRUCTURES TYPE V

ARM AND TENON DETAILS

DESIGNED BY: JM DRAWN BY: DVD CHECKED BY: JM

707L-07-3/11 3 of 11

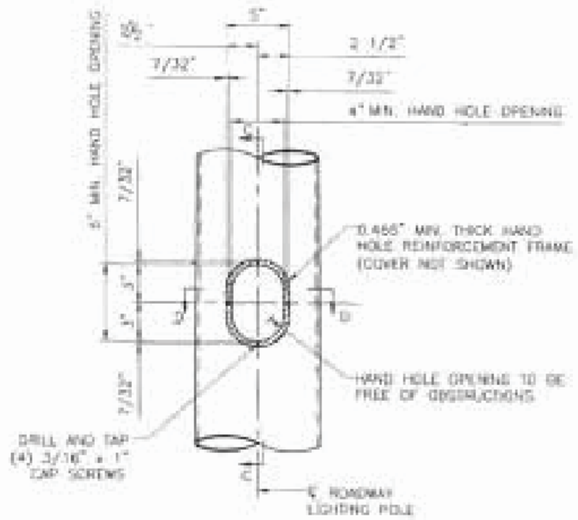

HAND HOLE DETAIL
NOT TO SCALE

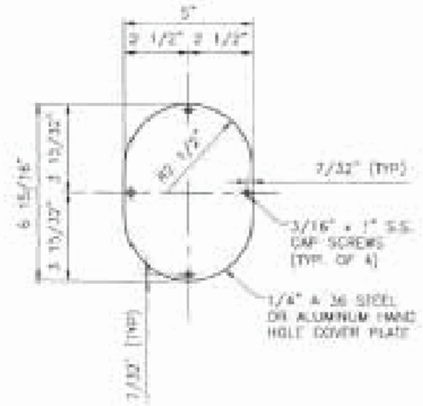

HAND HOLE COVER
NOT TO SCALE

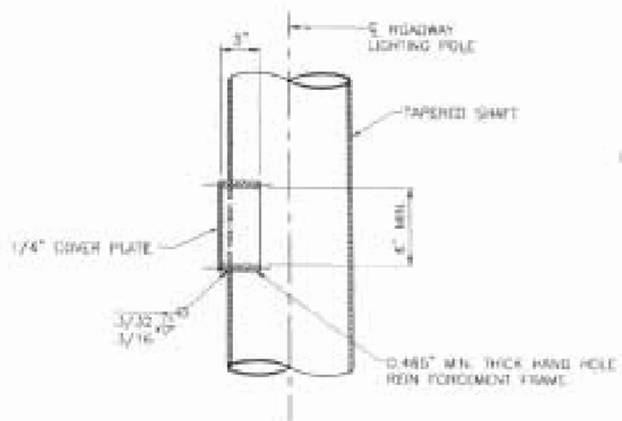

SECTION C–C
NOT TO SCALE

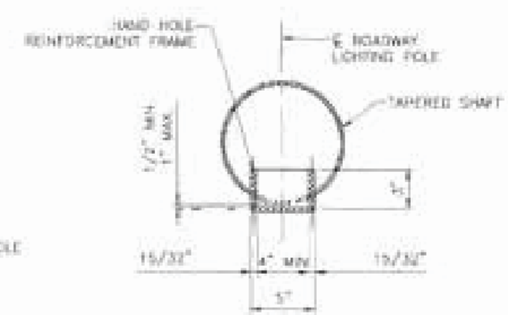

SECTION D–D
NOT TO SCALE

GENERAL NOTES

1. HANDHOLES SHALL BE FREE OF INTERNAL AND EXTERNAL OBSTRUCTIONS WHICH WOULD DAMAGE OR INTERFERE WITH WIRES OR THE PROPER OPERATION OF ANY OTHER ELECTRICAL COMPONENT.
2. HAND HOLE COVER SHALL BE FABRICATED FROM 1/4" A 36 STEEL (STEEL POLE), ALLOY 6063-T6 (ALUMINUM POLE) PLATE OR MAY BE HINGED WITH A SUITABLE METHOD OF CLOSURE.
3. HAND HOLE REINFORCEMENT FRAME SHALL BE FABRICATED WITH ANY OF THE FOLLOWING METHODS:
   - A. FABRICATED 5" O.D. x 1/2" WALL PIPES, ASTM A 53, GRADE B (STEEL POLE)
   - B. FORGED FROM STEEL CONFORMING TO ASTM A 576, GRADE 1021 (STEEL POLE).
   - C. FABRICATED FROM 15/32" (MIN) WALL TUBING CONFORMING TO ASTM A 36 (STEEL POLE).
   - D. CAST FROM STEEL CONFORMING TO ASTM A 27, GRADE 65-35 (STEEL POLE).
   - E. FABRICATED FROM 15/32" (MIN) WALL TUBING, ALLOY 356-T6 (ALUMINUM POLE).
4. HAND HOLE REINFORCING FRAMES AND TENON COMPONENTS SHALL BE WELDED TO THE POLES AND ARMS PRIOR TO GALVANIZING THE ASSEMBLIES.
5. STEEL HAND HOLE COVER PLATES SHALL BE GALVANIZED PER ASTM A 123.
6. COORDINATE LOCATIONS OF HOLES FOR CAP SCREWS IN HAND HOLE COVER PLATES WITH CONSTRUCTION OF HAND HOLE REINFORCING FRAME. TAPPED HOLES SHALL BE CENTERED IN REINFORCING FRAME RING.
7. HAND HOLES SHALL BE ORIENTED DOWNSTREAM OF ONCOMING TRAFFIC.
8. IF HAND HOLE FABRICATION DETAILS OTHER THAN THOSE DEPICTED HEREIN ARE PROPOSED, THE DESIGN SHALL ENSURE THAT SUCH HAND HOLE REINFORCEMENT SHALL STRENGTHEN POLE SHAFT SECTION TO THAT OF A SHAFT FABRICATED WITHOUT A HANDHOLE.

JOHN MIGLIACCIO
NEW MEXICO
19258
PROFESSIONAL ENGINEER
10/25/11

	DATE	BY	DESCRIPTION

REVISIONS FOR CURRENT APPROVAL

NEW MEXICO DEPARTMENT OF TRANSPORTATION STANDARD DRAWING

ROADWAY LIGHTING SUPPORT STRUCTURES TYPE V

HAND HOLE DETAILS

DESIGNED BY: JJM DRAWN BY: DRS CHECKED BY: JJM

707L-07-4/11 4 of 11

ANCHOR BOLT AND BASE PLATE TABLE FOR STEEL POLES

MOUNTING HEIGHT	BOLT DIAMETER	BOLT LENGTH	NUMBER OF BOLTS	SLOTTED HOLE SIZE	BASE PLATE OPENING	BOLT CIRCLE DIAMETER	BASE PLATE		BOLT TEMPLATE	
							WIDTH	THICKNESS		
					"A"	"B"	"C"	"D"	O.D.	I.D.
(FT)	(IN)	(IN)		(IN x IN)	(IN)	(IN)	(IN)	(IN)	(IN)	(IN)
50	1.0	36	4	1.25 x 2.25	7.0	15.0	16	1.0	18.0	12.0
40	1.0	36	4	1.25 x 2.25	6.0	11.5	14	1.0	14.5	8.5
30	1.0	36	4	1.25 x 2.25	5.0	11.5	14	1.0	14.5	8.5

ANCHOR BOLT TABLE FOR ALUMINUM POLES

MOUNTING HEIGHT	BOLT DIAMETER	BOLT LENGTH	NUMBER OF BOLTS	SLOTTED HOLE SIZE	BOLT CIRCLE DIAMETER	BOLT TEMPLATE	
					"B"	O.D.	I.D.
(FT)	(IN)	(IN)		(IN x IN)	(IN)	(IN)	(IN)
50	1.0	36	4	1.25 x 2.25	15.0	18.0	12.0
40	1.0	36	4	1.25 x 2.25	11.5	14.5	8.5
30	1.0	36	4	1.25 x 2.25	11.5	14.5	8.5

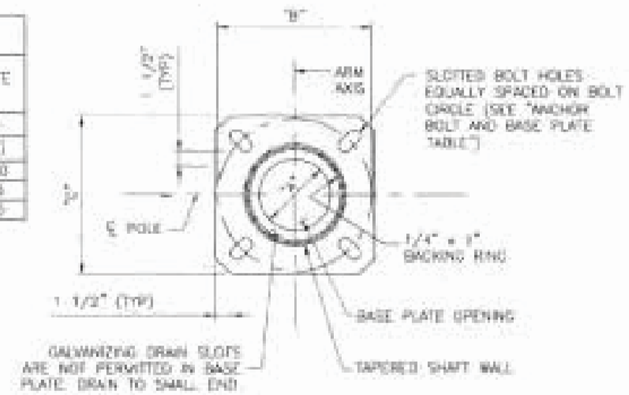

STEEL POLE BASE PLAN
NOT TO SCALE

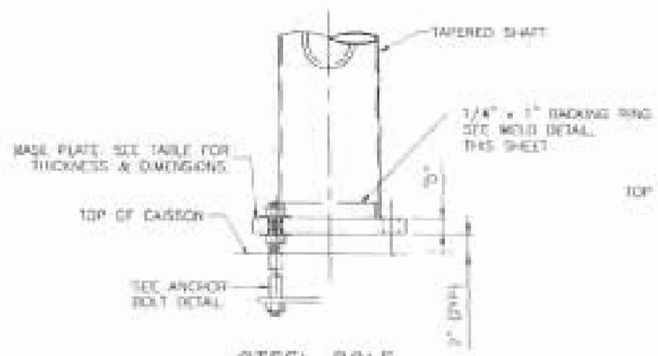

STEEL POLE BASE ELEVATION
NOT TO SCALE

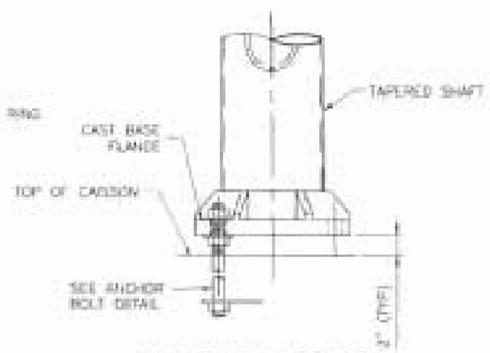

ALUMINUM POLE BASE ELEVATION
NOT TO SCALE

GENERAL NOTES

1. REFER TO SERIAL 707L-07-7/11 FOR BREAKAWAY POLE BASE SYSTEM DETAILS AND REQUIREMENTS.
2. INSTALL DIRECT-MOUNT BASE ONLY WHEN SPECIFIED. REFER TO PLANS FOR DIRECT-MOUNT OR BREAKAWAY BASE REQUIREMENT.
3. STEEL BASE PLATE SHALL BE FABRICATED FROM PLATE STEEL CONFORMING TO ASTM A 36 AND SHALL BE WELDED TO POLE SHAFT PRIOR TO GALVANIZING SHAFT.
4. ALUMINUM BASE FLANGE SHALL BE CAST FROM ALUMINUM ALLOY 356 T6, CONFORMING TO ASTM B 108. BASE FLANGE SHALL ACCOMMODATE FOUR ANCHOR BOLTS AS SHOWN, AND SHALL BE CAPABLE OF DEVELOPING THE FULL MOMENT, SHEAR, AND TORSIONAL STRENGTHS OF THE ALUMINUM POLE SHAFTS. BASE FLANGE SHALL ACCOMMODATE POLE SHAFT OUTSIDE DIAMETER, OR POLE SHAFT DIAMETER MAY BE INCREASED TO BE COMPATIBLE WITH BASE FLANGE.
5. ANCHOR BOLTS AND BOLT CIRCLE DIMENSIONS FOR THE ALUMINUM POLE OPTION SHALL ACCOMMODATE THE PROVIDED CAST BASE FLANGE. ANCHOR BOLT SIZES SHOWN IN THE ANCHOR AND BASE PLATE TABLE FOR STEEL POLES SHALL BE CONSIDERED A MINIMUM FOR THE ALUMINUM POLE OPTION.
6. ANCHOR BOLT PROJECTION LENGTHS AND TOTAL LENGTHS SHOWN IN THE ANCHOR AND BASE PLATE TABLE APPLY TO DIRECT-MOUNT BASE CONDITION. ADJUST ACCORDINGLY FOR BREAKAWAY BASE CONDITION.
7. SERVICE LOADS LISTED APPLY TO THE GOVERNING CONDITION OF SINGLE- AND DOUBLE-ARM MOUNTING CONFIGURATIONS.
8. WHEN BREAKAWAY COUPLINGS ARE SPECIFIED, THREAD UNC OF ANCHOR BOLTS SHALL MATCH THAT OF THE COUPLINGS.

JOHN NICOLACCIO
NEW MEXICO
19258
PROFESSIONAL ENGINEER
10/26/11

	DATE	BY	DESCRIPTION

REVISIONS ON SHEET NUMBERS

NEW MEXICO DEPARTMENT OF TRANSPORTATION STANDARD DRAWING

ROADWAY LIGHTING SUPPORT STRUCTURES TYPE V

BASE PLATE & ANCHOR BOLT DETAILS

DESIGNED BY: J.M. DRAWN BY: DRS CHECKED BY: JM

707L-07-5/11 5 of 11

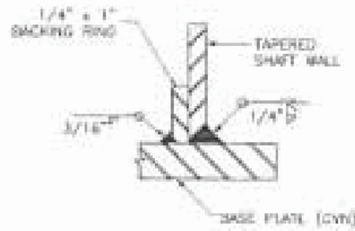

STEEL BASE WELD DETAIL

NOT TO SCALE

NOTE:
BACKING RING MUST BE FITTED/SIZED TO THE STEEL POLE AND CONTINUOUSLY FILLET WELDED TO THE BASE PLATE BEFORE FULL PENETRATION GROOVE WELD IS MADE.

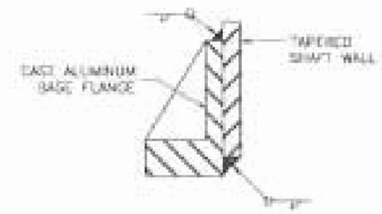

ALUMINUM BASE WELD DETAIL

NOT TO SCALE

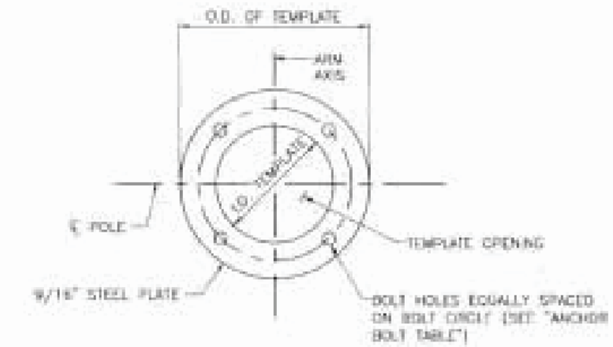

ANCHOR BOLT AND ANCHOR PLATE TEMPLATE

NOT TO SCALE

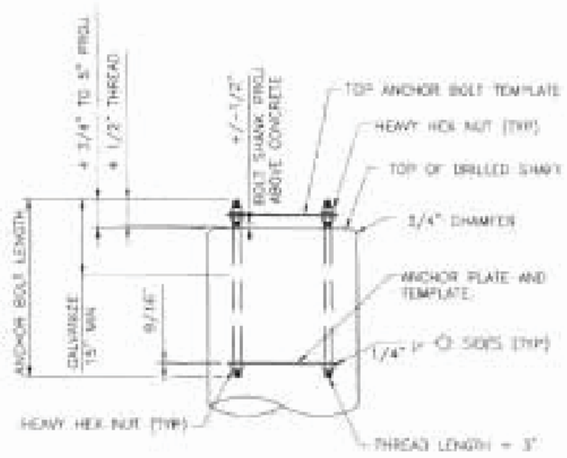

ANCHOR BOLT ASSEMBLY

NOT TO SCALE
(SEE ANCHOR BOLT TABLE)

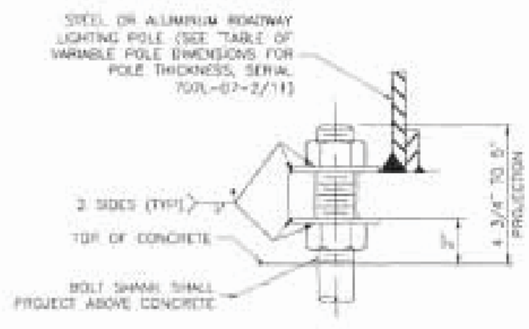

ANCHOR BOLT DETAIL

NOT TO SCALE

JOHN MICHAELSEN
NEW MEXICO
19258
PROFESSIONAL ENGINEER
10/25/11

	DATE	BY	DESCRIPTION

REVISIONS (OR CHANGE ORDERS)

NEW MEXICO
DEPARTMENT OF TRANSPORTATION
STANDARD DRAWING

ROADWAY LIGHTING
SUPPORT STRUCTURES
TYPE V

BASE PLATE & ANCHOR BOLT DETAILS

DESIGNED BY: JJM DRAWN BY: EYS CHECKED BY: JJM

707L-07-6/11 6 of 11

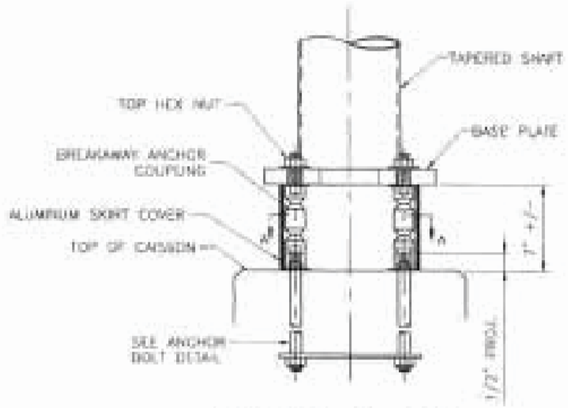

BREAKAWAY POLE BASE ELEVATION

NOT TO SCALE

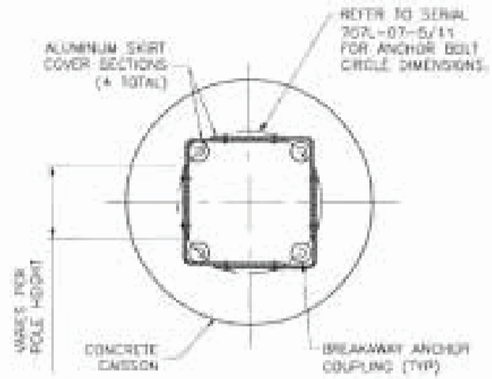

SECTION A-A: BREAKAWAY BASE SECTION

NOT TO SCALE

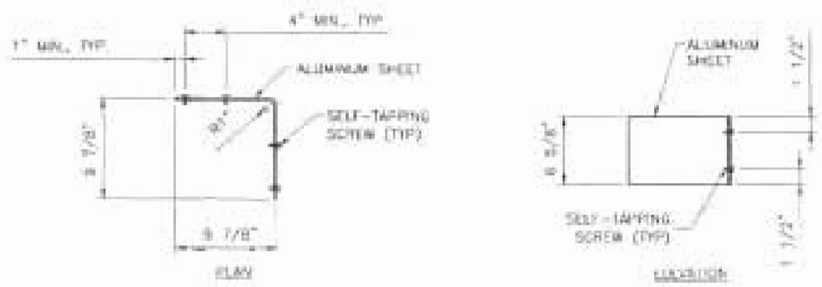

SKIRT COVER DIMENSIONS

NOT TO SCALE

GENERAL NOTES

1. REFER TO SERIAL 707L-07-5/11 FOR BASE PLATE AND ADDITIONAL ANCHOR BOLT DETAILS AND REQUIREMENTS.
2. SKIRT COVER SHALL BE FABRICATED FROM 1/16" SHEET ALUMINUM ALLOY 3003H14.
3. WHEN BREAKAWAY BASES ARE SPECIFIED, EACH LIGHT POLE SHALL BE FURNISHED WITH FOUR (4) SKIRT COVER SECTIONS AND SIXTEEN (16) SCREWS.
4. THE INTENDED USE OF THE SKIRT COVER IS TO ENCLOSE THE VOID UNDER POLES WITH BREAKAWAY SUPPORT COUPLINGS.
5. SCREWS SHALL BE SELF-TAPPING #10 x 5/8" STAINLESS STEEL.
6. BREAKAWAY SUPPORT COUPLINGS SHALL MEET THE REQUIREMENTS IN NCHRP REPORT 350, AND THE REQUIREMENTS IN 2009 (5th EDITION) AASHTO STANDARD SPECIFICATIONS FOR STRUCTURAL SUPPORTS FOR HIGHWAY SIGNS, LUMINAIRES AND TRAFFIC SIGNALS, SECTION 12.
7. WHEN BREAKAWAY BASES ARE SPECIFIED, EACH LIGHT POLE SHALL BE FURNISHED WITH FOUR (4) COUPLING SYSTEMS, COMPLETE WITH COUPLINGS, THREADED STUDS, WASHERS, NUTS, AND SHIMS.
8. ALTERNATE DESIGNS OF BREAKAWAY ASSEMBLIES WILL BE CONSIDERED ACCEPTABLE, PROVIDED THEY MEET THE REQUIREMENTS HEREIN. WHEN ALTERNATE BREAKAWAY SYSTEMS ARE UTILIZED, IT SHALL BE THE THE CONTRACTOR'S RESPONSIBILITY TO PROVIDE COMPATIBLE SKIRT COVERS, AND MAKE NECESSARY ADJUSTMENTS TO ANCHOR BOLT PROJECTIONS.
9. CERTIFICATION OF BOTH BREAKAWAY AND STRUCTURAL ADEQUACY, DESIGN CALCULATIONS AND/OR TEST DATA OF PRODUCTION SAMPLES TO SUPPORT CERTIFICATION SHALL BE PROVIDED FOR BREAKAWAY SYSTEMS IF REQUESTED BY NMDOT BRIDGE ENGINEER OR NMDOT TRAFFIC ENGINEER.

	DATE	BY	DESCRIPTION

REVISIONS SEE CHANGE NOTICES

NEW MEXICO DEPARTMENT OF TRANSPORTATION STANDARD DRAWING

ROADWAY LIGHTING SUPPORT STRUCTURES TYPE V

BREAKAWAY BASE DETAILS

DESIGNED BY: JJM DRAWN BY: [illegible] CHECKED BY: JJM

707L-07-7/11 7 of 11

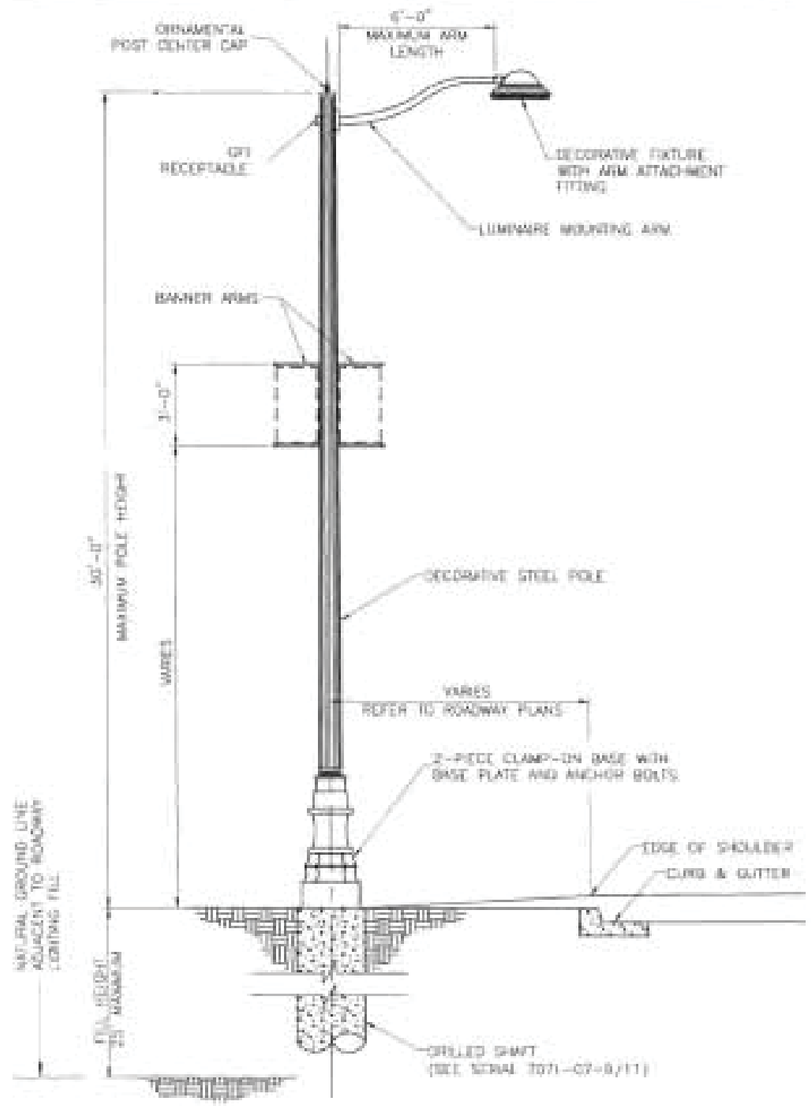

30' DECORATIVE ROADWAY LIGHTING OPTION ELEVATION

NOT TO SCALE

GENERAL NOTES

1. REFER TO SERIAL 707L-07-1/11 FOR GENERAL DESIGN CRITERIA, WORKMANSHIP REQUIREMENTS, AND SUBMITTAL REQUIREMENTS.

2. SHOP DRAWINGS FOR ORNAMENTAL LIGHT ASSEMBLIES SHALL BE PROVIDED TO THE NMDOT TRAFFIC ENGINEER FOR APPROVAL, PRIOR TO FABRICATION AND CONSTRUCTION. SHOP DRAWINGS SHALL DEPICT ALL FEATURES AND OPTIONS, AS SELECTED BY NMDOT, INCLUDING, BUT NOT LIMITED TO:

   A. POLE MODEL
   B. POLE HEIGHT
   C. POLE SHAFT MATERIAL
   D. POLE SHAFT STYLE
   E. POST CAP STYLE
   F. ARM MODEL
   G. ARM LENGTH
   H. ARM MATERIAL
   I. ARM STYLE
   J. LUMINAIRE FIXTURE MODEL
   K. LUMINAIRE FITTING MOUNT METHOD
   L. WATTAGE
   M. LIGHT SOURCE TYPE
   N. VOLTAGE
   O. LUMINAIRE LENS TYPE
   P. OPTICS TYPE
   Q. DECORATIVE BASE STYLE
   R. ACCESS DOOR LOCATION AND SIZE
   S. BASE PLATE
   T. ANCHOR BOLTS
   U. FOUNDATION LOADINGS
   V. GROUND FAULT INTERRUPTER LOCATION
   W. BANNER ARM LOCATIONS
   X. FINISHES

3. FOR ALL STRUCTURAL COMPONENTS PROVIDED BY THE ORNAMENTAL LIGHTING MANUFACTURER, CERTIFICATION OF STRUCTURAL ADEQUACY AND DESIGN CALCULATIONS TO SUPPORT CERTIFICATION SHALL BE PROVIDED IF REQUESTED BY THE NMDOT BRIDGE ENGINEER.

4. THE POLE AND BASE ASSEMBLY SHALL BE PROVIDED WITH ONE ACCESS DOOR FOR WIRING AND MECHANICALLY SECURED WITH TWO, TAMPER-PROOF STAINLESS STEEL SCREWS OR OTHER APPROVED METHOD. ACCESS DOOR SHALL BE LOCATED OPPOSITE FROM THE STREET-FACING SIDE OF THE POLE.

5. THE 30' DECORATIVE ROADWAY LIGHTING OPTION ELEVATION SHOWN ON THIS SERIAL IS A SCHEMATIC REPRESENTATION OF POSSIBLE FEATURES IN THE ASSEMBLY. ACTUAL OPTIONS, FEATURES, AND COMPONENTS SHALL BE SELECTED BY NMDOT ON A PROJECT BASIS AND WILL BE SPECIFIED IN THE ROADWAY PLANS.

	DATE	BY	DESCRIPTION
0	[illegible]	[illegible]	[illegible]

REVISIONS (SEE CHANGE SHEETS)

JOHN MIGLIACCIO NEW MEXICO 19258 PROFESSIONAL ENGINEER

10/27/11

NEW MEXICO DEPARTMENT OF TRANSPORTATION STANDARD DRAWING

ROADWAY LIGHTING SUPPORT STRUCTURES TYPE V

DECORATIVE LIGHTING REQUIREMENTS

DESIGNED BY: JM DRAWN BY: DRG CHECKED BY: JM

707L-07-8/11

8 of 11

NOTES:

1. CONCRETE SHALL CONFORM TO SECTION 510 – PORTLAND CEMENT CONCRETE. CONCRETE IS TO BE CLASS "A", f'c = 3000 PSI. ALL EXPOSED EDGES OF CONCRETE SHALL BE CHAMFERED 3/4" UNLESS OTHERWISE NOTED.

2. REINFORCING STEEL (REBAR) SHALL CONFORM TO SECTION 540 – STEEL REINFORCEMENT AASHTO M-31 (ASTM A 615), GRADE 60. DIMENSIONS REFER TO THE CENTERLINE OF BARS.

3. ANCHOR BOLTS SHALL CONFORM TO AASHTO M-314 (ASTM F 1554 GRADE 55). PROVIDE A HEX NUT, LEVELING NUT AND 2 WASHERS TOP AND BOTTOM OF EACH BOLT. ANCHOR BOLTS SHALL BE CONSIDERED INCIDENTAL TO THE FOUNDATIONS.

4. CONCRETE IS TO BE PLACED IN DRILLED HOLES FOR DRILLED SHAFTS. DUE TO EXISTING SOIL CONDITIONS THE USE OF A HOLE CASING MAY BE REQUIRED. THE CASING SHALL BE PULLED AS THE CONCRETE IS PLACED WITH A 6' MINIMUM OVERLAP.

5. FOUNDATION DESIGN IS FOR THE ROADWAY LIGHTING SUPPORT STRUCTURES STANDARD DIAMETERS. IF A LARGER DIAMETER IS FURNISHED, THE CONTRACTOR SHALL BUILD A LARGER FOUNDATION AS DETERMINED NECESSARY BY THE ENGINEER AND NO ADDITIONAL PAYMENT OR COMPENSATION SHALL BE MADE.

6. ALTERNATE DESIGNS FOR STANDARD FOUNDATIONS TO BE SUBMITTED TO THE ENGINEER FOR APPROVAL.

7. THE FOLLOWING SOIL DESIGN PARAMETERS WERE ASSUMED FOR THE POLE FOUNDATION DESIGN:

   a) COHESIVE SOIL
      SOIL UNIT WEIGHT γ = 100 lb/ft^3
      SOIL COHESION c = 800 lb/ft^2
      SOIL STRAIN ε_{50} = 0.02

   b) COHESIVE (SILT)
      SOIL UNIT WEIGHT γ = 105 lb/ft^3
      SOIL COHESION c = 700 lb/ft^2
      SOIL STRAIN ε_{50} = 0.01
      INTERNAL FRICTION ANGLE ϕ = 10°
      SOIL MODULUS K = 100 lb/in

   c) NON-COHESIVE SOIL
      SOIL UNIT WEIGHT γ = 120 lb/ft^3
      INTERNAL FRICTION ANGLE ϕ = 28°
      SOIL MODULUS K = 90 lb/in^3

   d) ROCK
      ROCK UNIT WEIGHT γ = 140 lb/ft^3
      ROCK UNCONFINED STRENGTH = 1500 lb/in^2

   SHOULD THE SOIL CONDITIONS VARY IN SIGNIFICANT CONTRAST TO ANY OF THOSE DESCRIBED IN a, b, c OR d ABOVE, THE STATE GEOTECHNICAL ENGINEER SHALL BE CONSULTED FOR APPROVAL OF ANY REQUIRED REMEDIAL MEASURES BEFORE THE FOUNDATION PLACEMENT.

8. ALL HOLES FOR FOUNDATION SHAFTS SHALL BE POURED AGAINST UNDISTURBED EARTH. IF SHAFT IS NOT LOCATED IN UNDISTURBED SOILS THEN ALL SOILS THE SHAFT IS PLACED INTO SHALL BE COMPACTED TO 95% MINIMUM.

9. FINISHED GRADE FOR ALL FOUNDATIONS TO BE DETERMINED BY THE PROJECT ENGINEER. THE TOP OF STANDARD FOUNDATIONS SHALL BE FLUSH WITH ADJACENT SIDEWALK OR PAVED AREAS WHEN PRESENT AND SHALL CONFORM TO THE AMERICANS WITH DISABILITIES ACT.

10. FOR BASE PLATE AND ANCHOR BOLT DETAILS, SEE 707L-07-5/11 THROUGH 707L-07-7/11.

11. ALL REINFORCING STEEL SHALL BE NON-EPOXY COATED UNLESS OTHERWISE NOTED.

SERVICE LOADS AT TOP OF DRILLED SHAFT/SPREAD FOOTING

MOUNTING HEIGHT	AXIAL "P"	SHEAR "V"	MOMENT "M"	TORSION "T"
(FT)	(KIP)	(KIP)	(KIP-FT)	(KIP-FT)
50	0.71	0.88	30.67	1.09
40	0.48	0.69	18.77	1.07
30	0.38	0.57	12.00	1.06
30 ORNAMENTAL	0.79	1.24	21.68	0.98

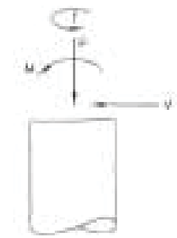

JEFFREY S. MEHLE
NEW MEXICO
14790
PROFESSIONAL ENGINEER
10/01/08

NO.	DATE	REVISED BY	DESCRIPTION

REVISIONS (OR CHANGE NOTICE)

NEW MEXICO
DEPARTMENT OF TRANSPORTATION
STANDARD DRAWING

ROADWAY LIGHTING
SUPPORT STRUCTURES
TYPE V

FOUNDATION GENERAL NOTES

DESIGNED BY MJB DRAWN BY BDL CHECKED BY JDR

707L-07-9/11 1 OF 1

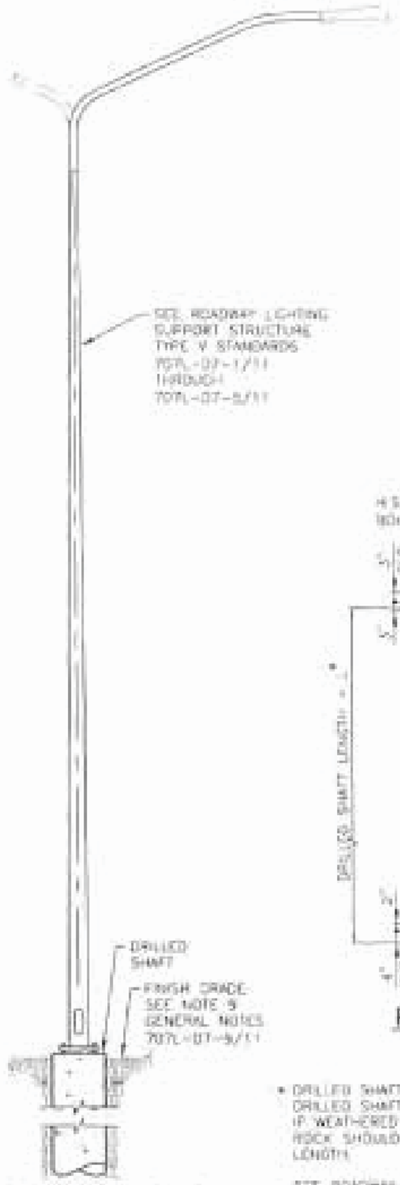

ROADWAY LIGHTING
POLE ELEVATION
NOT TO SCALE

SECTION A-A
NOT TO SCALE

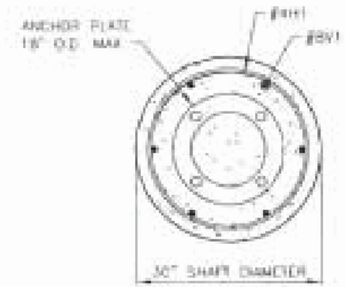

SECTION B-B
NOT TO SCALE

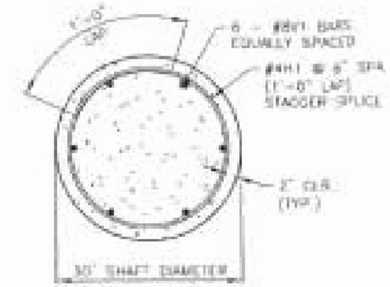

SECTION C-C
NOT TO SCALE

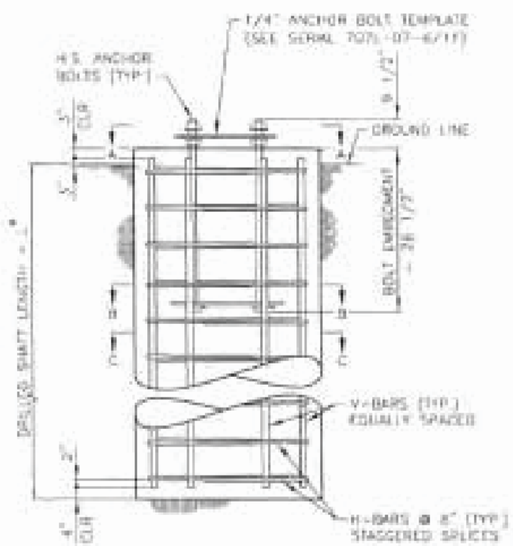

FOUNDATION ELEVATION
NOT TO SCALE

* DRILLED SHAFT LENGTH IS MEASURED AS LENGTH OF SHAFT IN SOIL. DRILLED SHAFT LENGTH IS BASED ON UNWEATHERED ROCK CONDITION. IF WEATHERED ROCK IS ENCOUNTERED, THE CAPACITY OF WEATHERED ROCK SHOULD BE NEGLECTED. SEE DRILLED SHAFT LENGTHS TABLE FOR LENGTH.

SEE ROADWAY LIGHTING SUPPORT STRUCTURES TYPE V, FOUNDATION GENERAL NOTES, 707L-07-9/11 FOR DRILLED SHAFT DESIGN LOADS.

DRILLED SHAFT LENGTHS

POLE HEIGHT (ft)	DRILLED SHAFT LENGTH (ft)
50	7.5
30 ORNAMENTAL	7.0
40	6.5
30	6.0

ANCHOR BOLTS

POLE HEIGHT (ft)	POLE DIAMETER O.D. (in)	BOLT DIAMETER (in)	BOLT LENGTH (in)	NUMBER OF BOLTS	BOLT CIRCLE DIAMETER (in)
50	10	1.000	38	4	14
40	9	0.875	38	4	13
30	8	0.750	36	4	12

ESTIMATED QUANTITIES TABLE

ITEM NO	DESCRIPTION OF ITEM	UNIT	50 FT POLE HEIGHT TOTALS	30 FT ORN POLE HEIGHT TOTALS	40 FT POLE HEIGHT TOTALS	30 FT POLE HEIGHT TOTALS
511000	STRUCTURAL CONCRETE CLASS "A"	CU. YDS.	1.38	1.27	1.18	1.10
540060	REINFORCING BARS GRADE 60	LBS	183	175	163	149

REINFORCING SCHEDULE

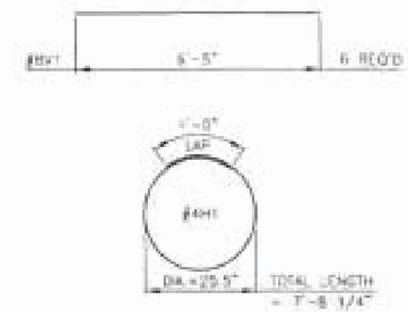

NO.	DATE	REV BY	DESCRIPTION

REVISIONS (OR CHANGE NOTICES)

NEW MEXICO
DEPARTMENT OF TRANSPORTATION
STANDARD DRAWING

ROADWAY LIGHTING
SUPPORT STRUCTURES
TYPE V

DRILLED SHAFT DETAILS

DESIGNED BY HJG DRAWN BY JBC CHECKED BY JDM

707L-07-10/11

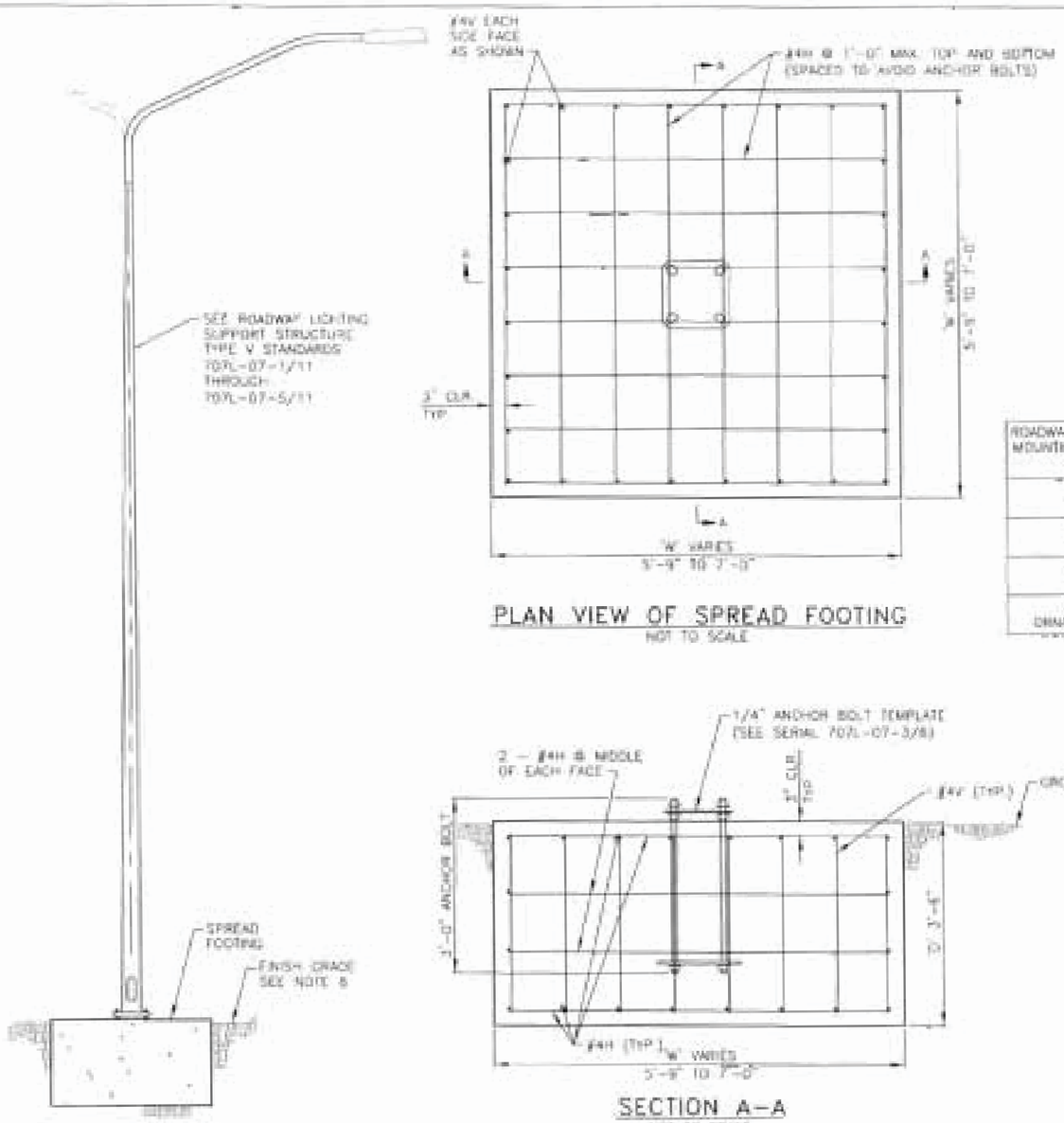

PLAN VIEW OF SPREAD FOOTING
NOT TO SCALE

ROADWAY LIGHTING POLE ELEVATION
NOT TO SCALE

SECTION A-A
NOT TO SCALE

DESIGN DATA:

DESIGN IS IN ACCORDANCE WITH AASHTO LRFD, 2010 FOR STRUCTURAL SUPPORTS FOR HIGHWAY SIGNS, LUMINAIRES AND TRAFFIC SIGNALS, LATEST EDITION.

DESIGN STRENGTH:

CONCRETE: f'_c = 3000 psi @ 28 DAYS.
REINFORCING STEEL: f_y = 60 ksi
SOIL BEARING: 1.0 T/sq. ft

SEE ROADWAY LIGHTING SUPPORT STRUCTURE TYPE V, FOUNDATION GENERAL NOTES, 707L-07-9/11 FOR SPREAD FOOTING DESIGN LOADS.

ROADWAY LIGHTING MOUNTING HEIGHT (ft)	SQUARE FOOTING WIDTH 'W' (ft)	SQUARE FOOTING DEPTH 'D' (ft)	REINFORCING SCHEDULE				ESTIMATED QUANTITIES	
			MARK	S-EL	LENGTH	NO. REQ'D	CONCRETE (cu. yd.)	BARS (lbs)
50	7.00	3.50	#4V	#4	5'-0"	28	6.4	230
			#4H	#4	6'-8"	40		
40	6.50	3.50	#4V	#4	5'-0"	24	5.5	193
			#4H	#4	6'-0"	36		
30	5.75	3.50	#4V	#4	5'-0"	20	4.3	153
			#4H	#4	5'-3"	32		
30 ORNAMENTAL	6.75	3.50	#4V	#4	5'-0"	24	5.9	199
			#4H	#4	6'-3"	36		

JEFFREY S. MERLE
NEW MEXICO
14799
PROFESSIONAL ENGINEER
10/25/18

NO.	DATE	REV BY	DESCRIPTION

REVISIONS (OR CHANGE NOTICES)

NEW MEXICO
DEPARTMENT OF TRANSPORTATION
STANDARD DRAWING

ROADWAY LIGHTING
SUPPORT STRUCTURES
TYPE V

SPREAD FOOTING DETAILS

DESIGNED BY NJB DRAWN BY BDC CHECKED BY JSM

707L-07-11/11

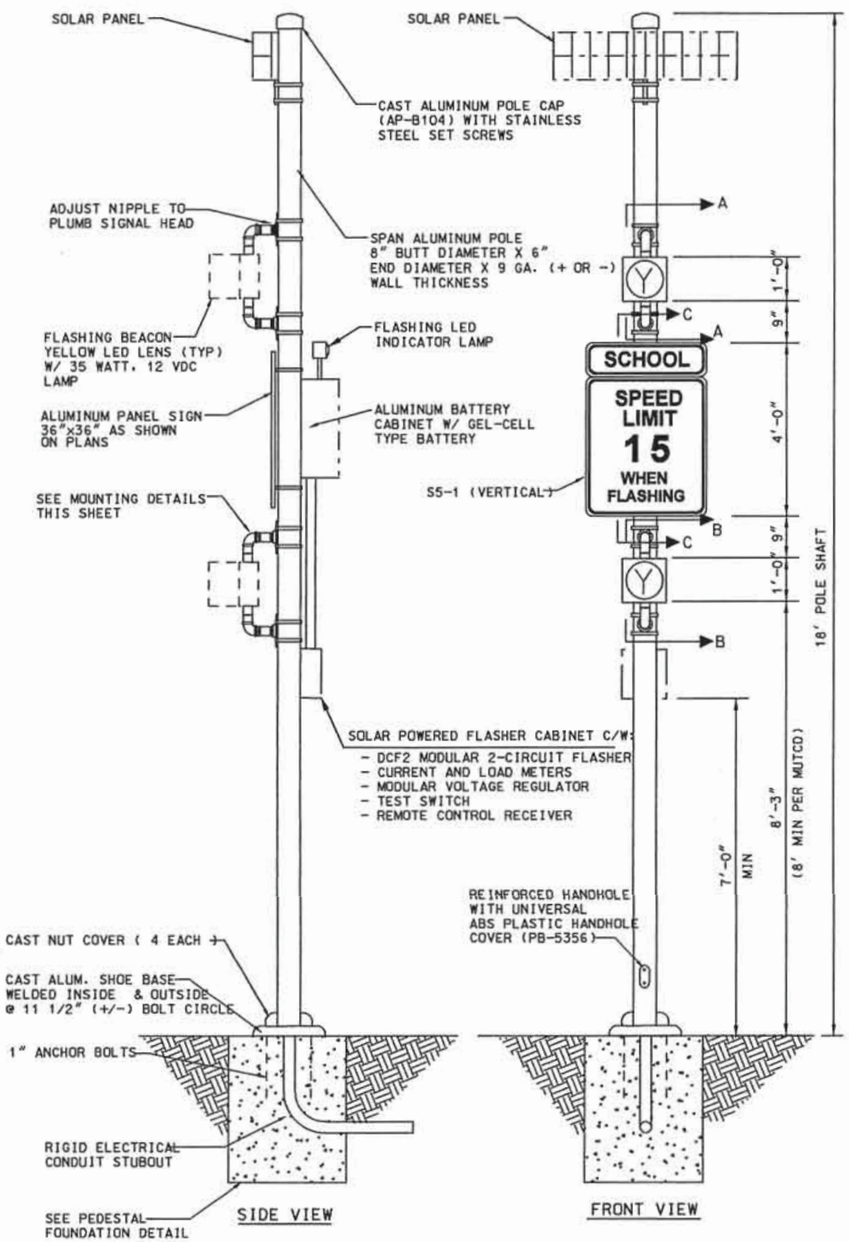

SOLAR POWERED
HAZARD IDENTIFICATION BEACON DETAIL
(TYPE I STANDARD)

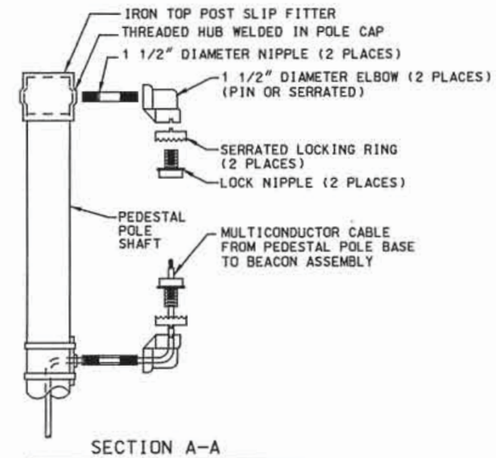

SECTION A-A

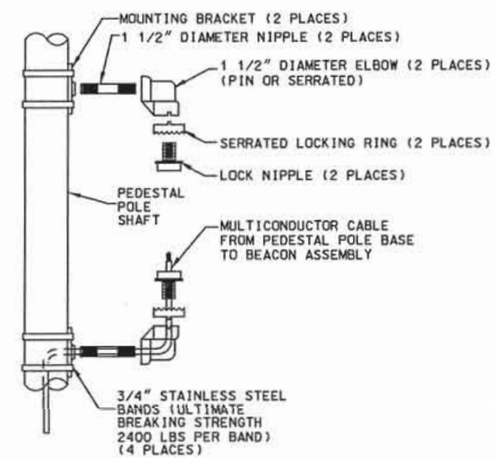

SECTION B-B

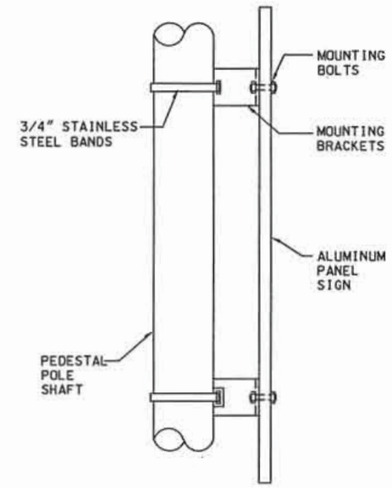

VERTICAL SIGN MOUNT DETAIL

SECTION C-C

S5-1 (VERTICAL)

TYPICAL SIGN FACE DETAIL FOR SCHOOL BEACON

COLORS

LEGEND: BLACK(NON-REFLECTIVE)
TOP PANEL: FYG
BOTTOM PANEL: WHITE
OUTSIDE BORDER: WHITE
INSIDE BORDER: BLACK

NOTES:

1. EACH HAZARD IDENTIFICATION BEACON (TYPE I STANDARD) WILL BE MEASURED AND PAID FOR UNDER THE FOLLOWING ITEMS:

- TYPE I STANDARD - 18' (1 EACH BEACON)
- FOUNDATION FOR TYPE I STANDARD (BY STRUCTURAL CONCRETE AND REINFORCING BARS)
- 1 SECTION TRAFFIC SIGNAL ASSEMBLY (2 EACH BEACON)
- ALUMINUM PANEL SIGNS (BY THE SQUARE FOOT)
- LED INDICATOR LAMP (INCIDENTAL)

NO.	DATE	REV. BY	DESCRIPTION

REVISIONS (OR CHANGE NOTICES)

NEW MEXICO
DEPARTMENT OF TRANSPORTATION
STANDARD DRAWING

SCHOOL BEACON DETAILS
FOR PEDESTAL POLE

APPROVED — DESIGN ENGINEER — 12-22-09 DATE

DESIGNED BY___ DRAWN BY___ CHECKED BY___

707S-06-1/1